BRT
POOL PRODUCTION FOCUS

2024
NEW CATALOGUE



20 ANNIVERSARY Years

www.barutgroup.com.tr

SERMED® HAVUZ

New

YOU CAN REACH THE POOL YOU WANT FROM HERE.

Available on the App Store

GET IT ON Google Play

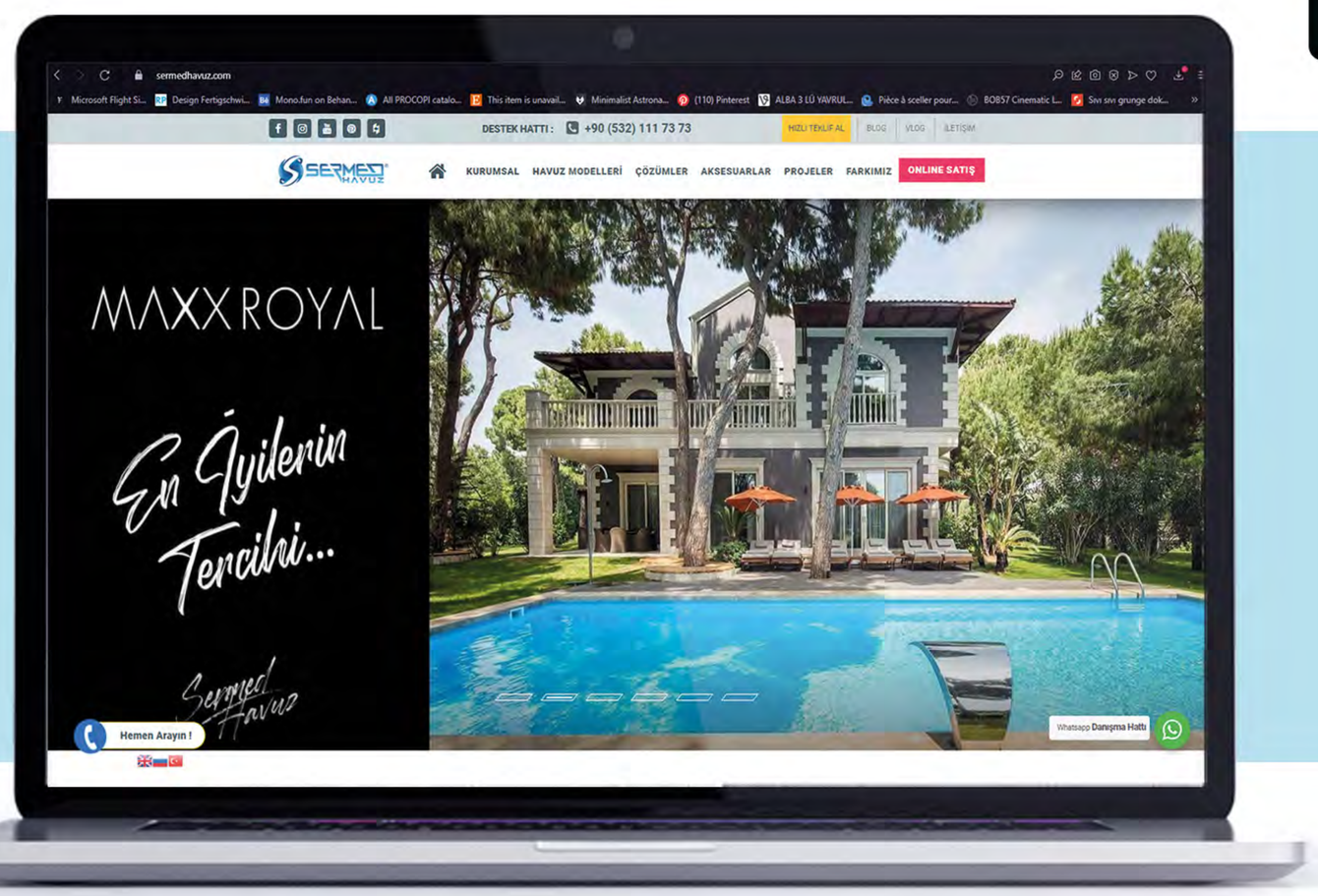

www.sermedhavuz.com.tr

SPECIAL SWIMMING POOL PROJECTS TO MAKE YOUR GARDEN UNIQUE FOR YOU!!!

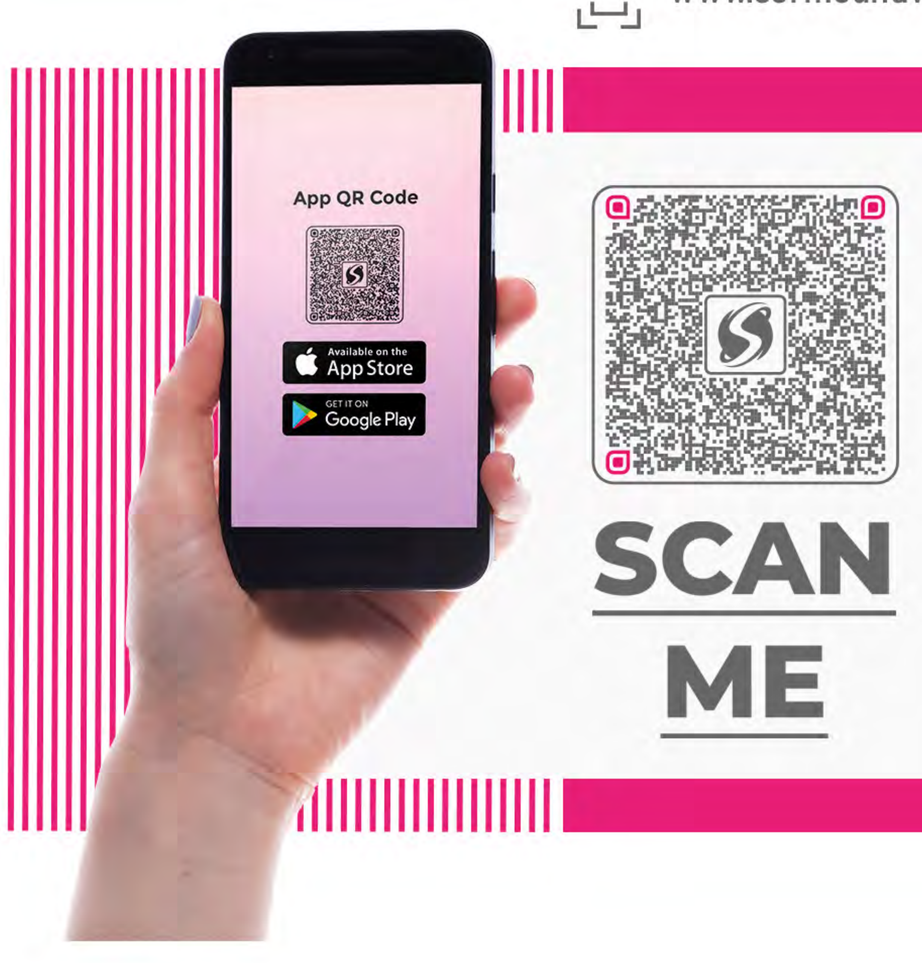

MOBILE APP

You Can Find Everthing About The Pool Here

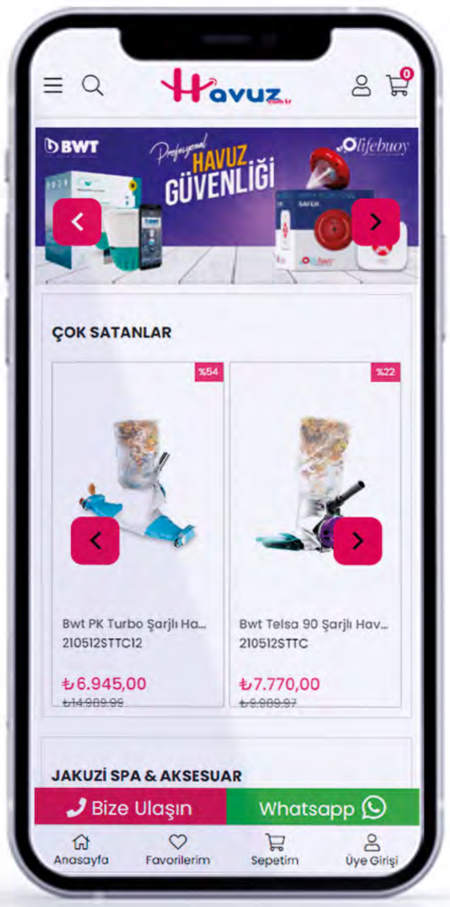

- Give your havuz.com.tr order with one click.
- Eliminate waiting times.

Available on the App Store

GET IT ON Google Play

Order from anywhere!
Access all the information by scanning the QR code.

SCAN ME

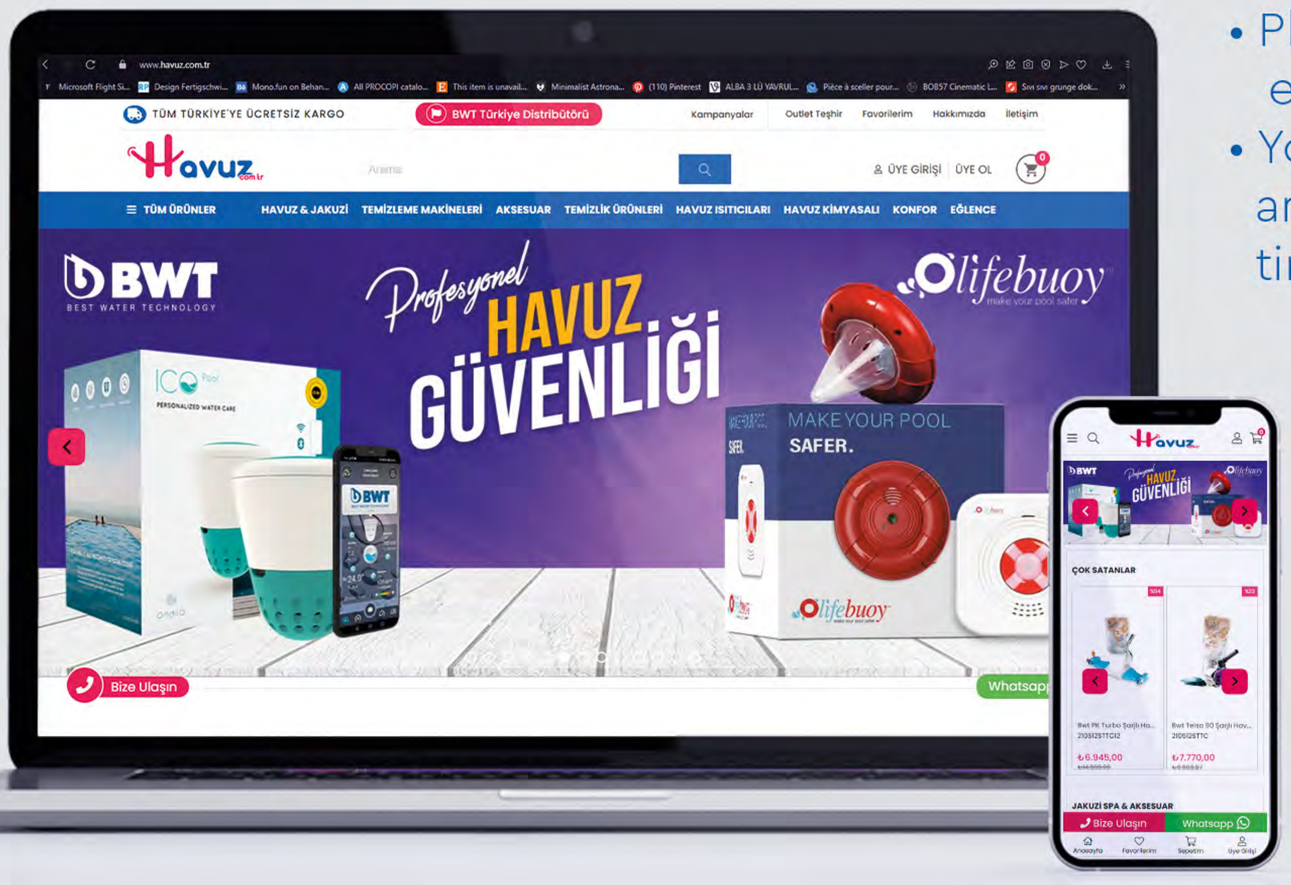

- Place your order on Havuz.com.tr to eliminate waiting times.
- Your order is confirmed, prepared and delivered within the selected time frame.

2024
NEW PRODUCTS

Enjoy the Holiday in Your Garden

STAINLESS WATERFALL



PAGE 169

STAINLESS SHOWER



PAGE 153

SAND FILTER



PAGE 103

ZNPLUS STEEL PANEL



PAGE 17

BRT
POOL PRODUCTION FOCUS

POOL PILLOW



PAGE 161

RENOLIT ALKORPLAN

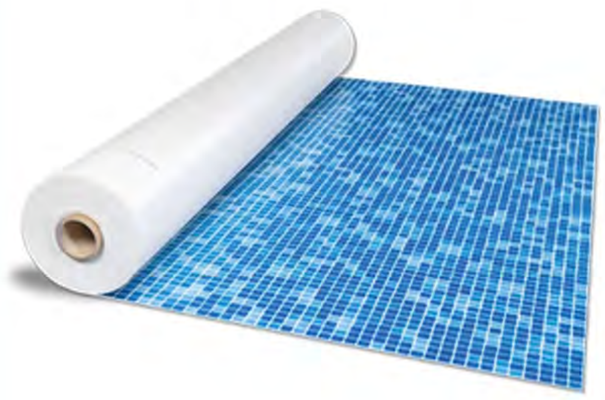

PAGE 63

STAINLESS STEEL LADDER



PAGE 133

NEW2024

BWT COSMY 200



PAGE 189

POOL SALT DEVICES



PAGE 210

SUNBED

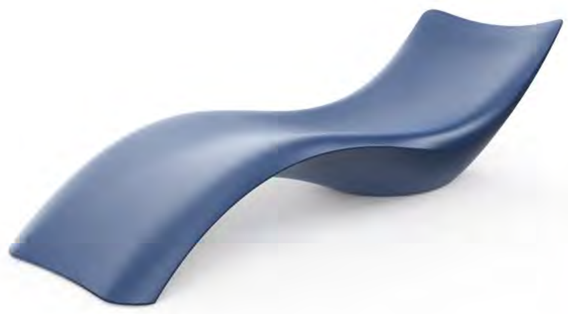

PAGE 165

BRT
POOL PRODUCTION FOCUS

POOL COVER



PAGE 71

CLEANING EQUIPMENT



PAGE 179

POOL CHEMICALS



PAGE

LAMP



PAGE 127

BORA STEEL POOL



PAGE 53

BRT
POOL PRODUCTION FOCUS

BWT POOL VACUUM CLEANER BC40



PAGE 204

BRT SPA & JACUZZI



PAGE 83

BWT MANGA CR35



PAGE 205

SKIMMER

PAGE 121

NEW2024



ABOUT US

We have been offering innovation and technology together in the pool industry since 2003. BRT, which we laid the foundations of in 2003, is celebrating its 20th birthday as of 2023. We know the meaning and importance of the support given by all our colleagues, suppliers and customers in reaching this day without losing our initial excitement, scientific knowledge and commitment to technology. As long as we feel this s upport and trust with us, BRT believes that it will maintain the same respected place in the prefabricated pool sector for many more years and we express our gratitude to them.





We produce solutions suitable for different needs, from individual pools used exclusively in our production facilities in Istanbul and Düzce, to construction site and social facility pools, to the most comfortable living spaces of rehabilitation pools. We are implementing Maldiv prefabricated pools, Fiplus panel pool systems and many special and different productions in 12.000 m^2 open and 6.000 m^2 closed area.
As the BRT family, we are working for a stronger tomorrow with our different brand in our group, our core production staff of 90, our project management team, our field workers who can reach up to 200 people depending on the density of the construction site, our dealer network all over Turkey and our representations abroad.

Logistics

BRT Group produces most of its production to meet the needs of its customers.
Such a strategy is only possible with the support of:
excellent logistics and large storage facilities.
For this reason, 4 large logistics units were created:











As the BRT family, which values innovation,
we continue to work intensively with our
R&D and design team to develop new products
that our industry and our customers expect from us.

NEW2024

SALES ORGANISATION EXPORT

New Showroom



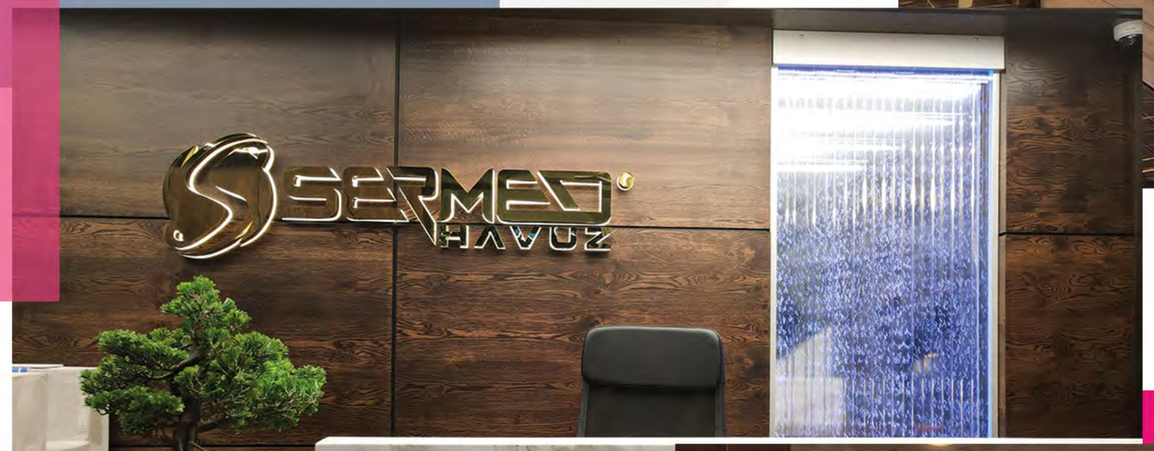



MORE-TEAM



Serhat BARUTÇU
FOUNDER
sbarutcu@barutgroup.com.tr



Hakan ÖZTÜRK
MANAGING DIRECTOR
hozturk@barutgroup.com.tr



Tamer BAŞ
GENERAL MANAGER
tbas@barutgroup.com.tr

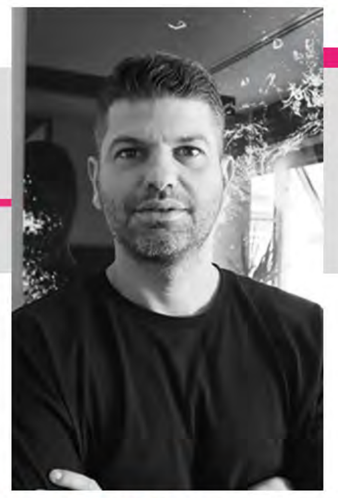

Arda BARUTÇU
SALES MANAGER
abarutcu@barutgroup.com.tr



Serkan GÖKDUMAN
SERVICE MANAGER
sgokduman@barutgroup.com.tr



Gamze MERTOĞLU
EXPORT & IMPORT ADMINISTRATOR
gmertoglu@barutgroup.com.tr



Hale GİRAYLAR
IZMIR REGIONAL MANAGER
hgiraylar@barutgroup.com.tr



Zviad ZKHALVASHI
GEORGIA REGIONAL MANAGER
zkhalvashi@barutgroup.com.tr

HEADQUARTERS
Ferhatpaşa Mah. 35. Sok. No/8
ATAŞEHİR | İSTANBUL | TÜRKİYE
+90 (850) 495 0 200
info@barutgroup.com.tr
www.brtgroup.com.tr

GEORGIA BRANCH
142 Airport Highway
BATUM | GEORGIA
+90 (850) 495 0 200
info@barutgroup.com.tr
www.brtgroup.com.tr

AEGEAN BRANCH
Kalabak Mah.3275 Sokak No: 2
URLA | İZMİR | TÜRKİYE
+90 (850) 495 0 200
info@barutgroup.com.tr
www.brtgroup.com.tr

FACTORY
Çevrik Mah. 164. Sok. NO:10/A
Hafız Osman Cad. Cumayeri
DÜZCE | TÜRKİYE
+90 (850) 495 0 200
info@barutgroup.com.tr
www.brtgroup.com.tr

BRT TECHNICAL TRAINING

We train you and/or your partners to become professional installers at our state-of-the-art training center in Istanbul. We provide you with all the necessary skills and knowledge to install our swimming pool membranes in two training sessions. It is accompanied by a factory tour and an enjoyable fringe program. The number of participants in both courses is limited to 8 people to achieve maximum training effect in small groups.

At the end of the course you will receive a producer certificate proving successful participation.

TECHNICAL TRAINING
INSTALLATION AND REPAIR

PROFESSIONAL TRAINING

During the year, the company BRT Group offers:
technical training to professional clients.
Specialist Trainings are carried out in training centers.


SermedUI
Güvenli değil | sermedapidevui.s3-website.eu-central-1.amazonaws.com/#/orderManagement/orders
BRT
POOL PRODUCTION FOCUS
Satış Siparişleri
Hoşgeldin serkangokduman
Bugün: 22 Aralık 2021
Satış Siparişi Oluştur
Satış Siparişi Ge...
İşlem... Sipariş No Müşteri Ülke Şehir İlçe Adres Sipariş Notu
12 Öner Türkiye İSTANBUL ATAŞEHİR Barabaros mah. Not
11 Burak Türkiye İSTANBUL EYÜPSULTAN Nişanca Mahallesi Yavedut Caddesi No:45 34050 Not
10 ali Türkiye AFYONKARAHİSAR BOLVADİN no:55 2 lamba eklenecek
9 Öner Türkiye İSTANBUL ATAŞEHİR Barabaros mah. Not
8 gjghjg Türkiye AĞRI DİYADİN sadsad kkkk
7 Onur Türkiye SİNOP MERKEZ Sinop Kordon Boyu 1 ay içinde tamamlanacak
6 Ömer Türkiye ISPARTA MERKEZ Bahçelievler Mahallesi 102. Cadde No:75 32200 Havuz
5 Edip Türkiye İSTANBUL ATAŞEHİR Örnek mahallesi ön ödeme alındı.
4 Burak Türkiye İSTANBUL EYÜPSULTAN Nişanca Mahallesi Yavedut Caddesi No:45 34050 Not Siparişi Reddetme Sebe...
3 Selim Türkiye ADANA CEYHAN Adana - Ceyhan No53 not
Not
Sipariş Notu 2
4°C Çok bulutlu


PRINT


Güvenli değil | sermedapidevui.s3-website.eu-central-1.amazonaws.com/#/orderManagement/orders
BRT
POOL PRODUCTION FOCUS
Satış Siparişleri
Satış Siparişi Yönetimi
Hoşgeldin serkangokduman
Bugün: 22 Aralık 2021
Satış Siparişi Oluştur
Satış Siparişi Ge...
İşlem... Sipariş No Müşteri Ülke Şehir İlçe Adres Sipariş Notu
12 Öner Türkiye İSTANBUL ATAŞEHİR Barabaros mah. Not
11 Burak Türkiye İSTANBUL EYÜPSULTAN Nişanca Mahallesi Yavedut Caddesi No:45 34050 Not
10 ali Türkiye AFYONKARAHİSAR BOLVADİN no:55 2 lamba eklenecek
9 Öner Türkiye İSTANBUL ATAŞEHİR Barabaros mah. Not
8 gjghjg Türkiye AĞRI DİYADİN sadsad kkkk
7 Onur Türkiye SİNOP MERKEZ Sinop Kordon Boyu 1 ay içinde tamamlanacak
6 Ömer Türkiye ISPARTA MERKEZ Bahçelievler Mahallesi 102. Cadde No:75 32200 Havuz
5 Edip Türkiye İSTANBUL ATAŞEHİR Örnek mahallesi ön ödeme alındı.
4 Burak Türkiye İSTANBUL EYÜPSULTAN Not Siparişi Reddetme Sebe...
3 Selim Türkiye ADANA not
2 Ezgi Türkiye ANTALYA Not
1 Ömer Türkiye ISPARTA Sipariş Notu 2
4°C Çok bulutlu

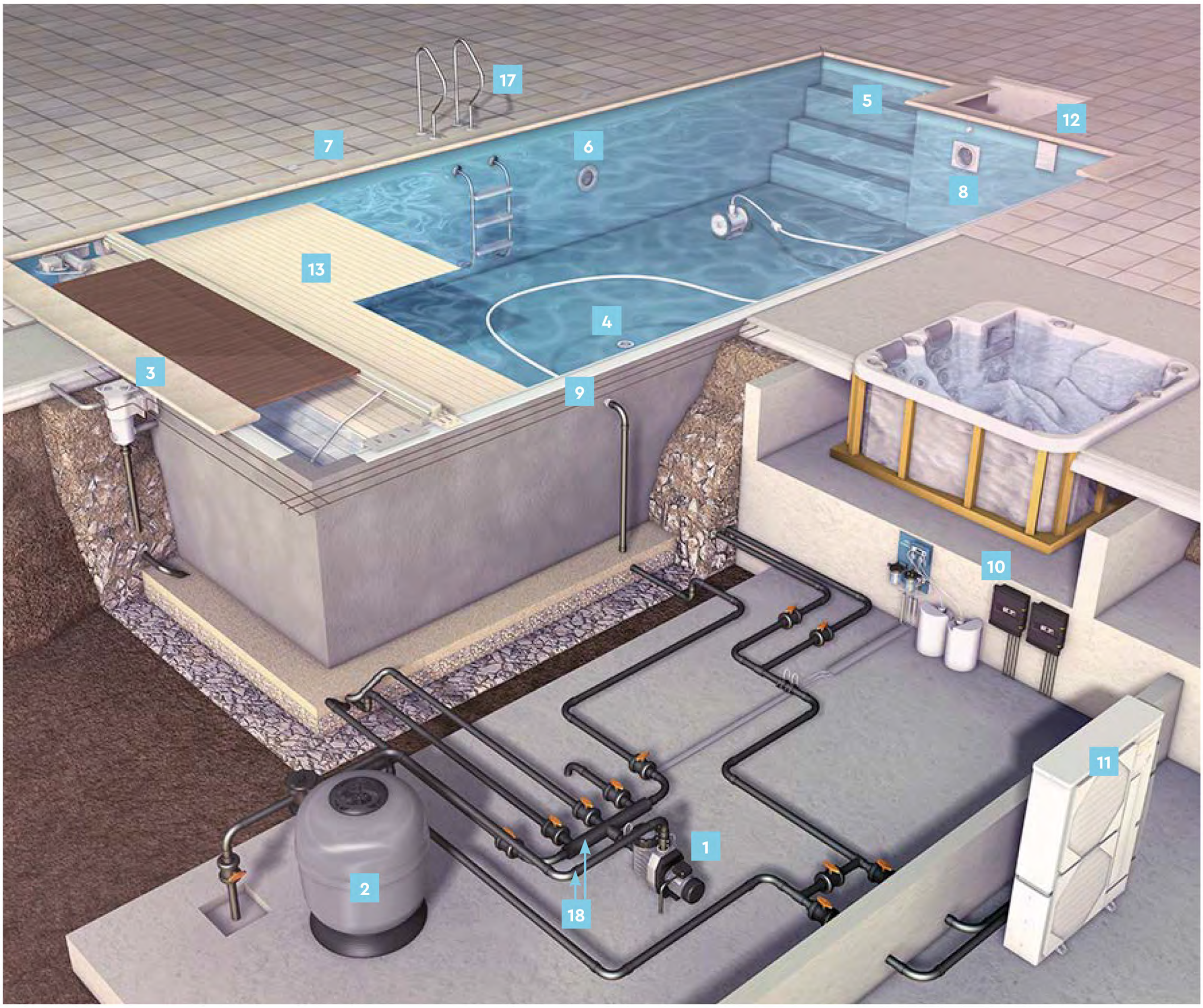

1 Self-priming pump with prefilter

2 Filter with 6-way valve

3 Skimmer, recommended flow rate for each skimmer:
- ④ between 3 and 8 m³/h with a Ø 50 mm port
- ④ between 5 and 12 m³/h with a Ø 63 mm port

4 Dual function main drain:
- ④ filtration suction (recommended 30% of the recycling volume)
- ④ draining the pool

5 Return fitting with or without directional jet.
Recommended flow rate per return fitting:
- ④ between 3 and 10 m³/h with a Ø 50 mm port
- ④ between 5 and 12 m³/h with a Ø 63 mm port

6 Very low voltage underwater LED light (12 V)

7 Deck box

8 Counterswim unit

9 Vacuum point

10 Electrical panel

11 Heat pump

12 Level controller

13 Submerged automatic cover

14 Ladder – Rambouillet

15 Suction and return manifold and large radius elbow

PLACEMENT OF THE POOL FITTINGS



SKIMMER

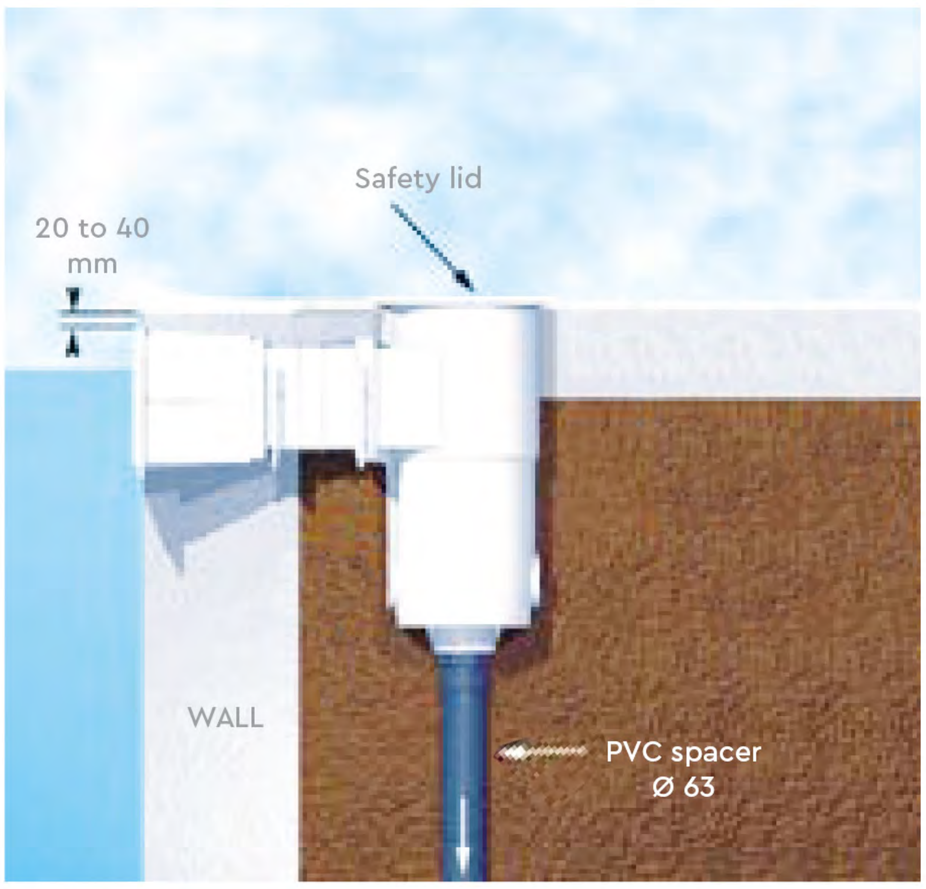

NOZZLE

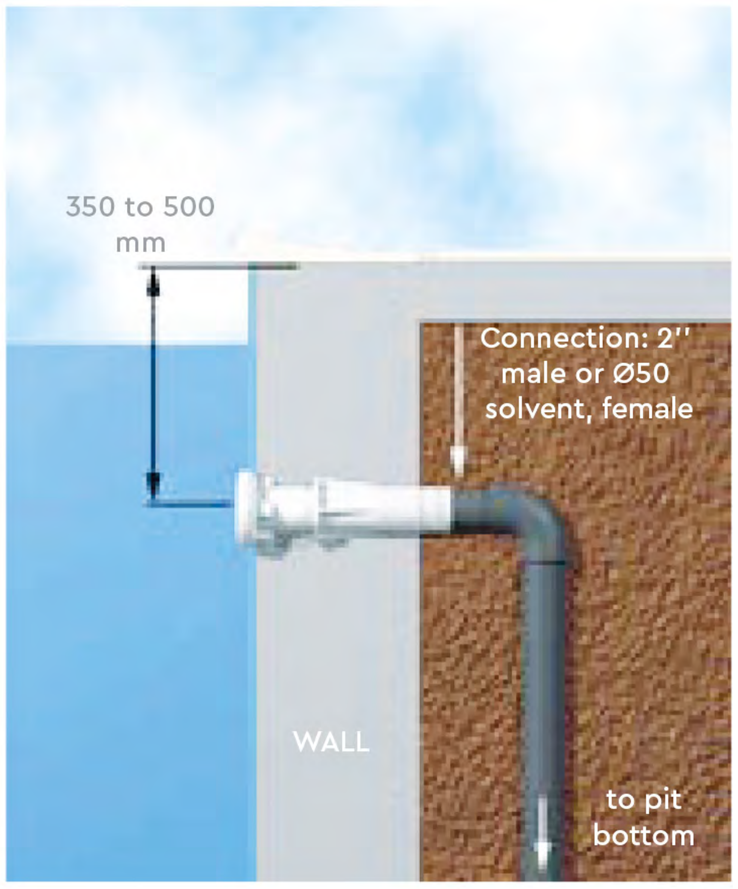

VACUUM NOZZLE

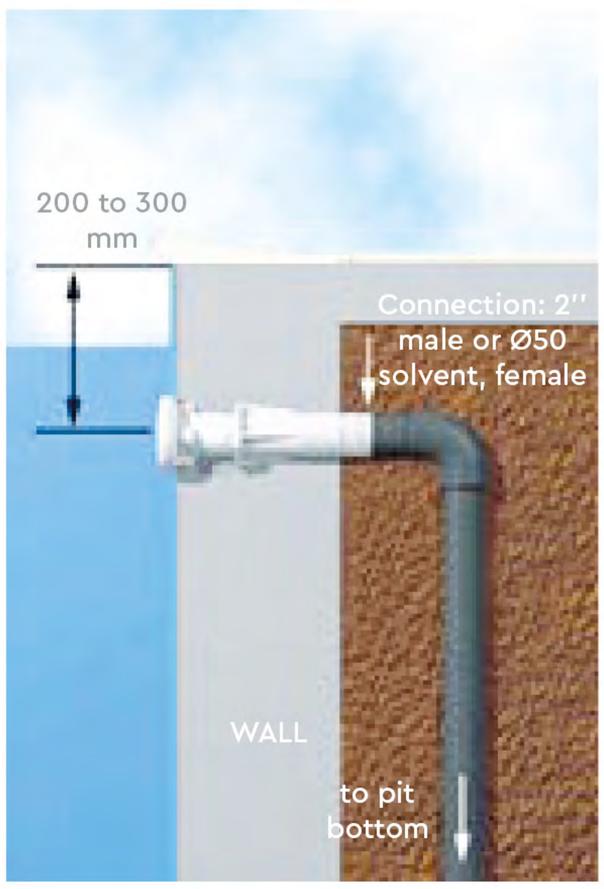

LED LAMP

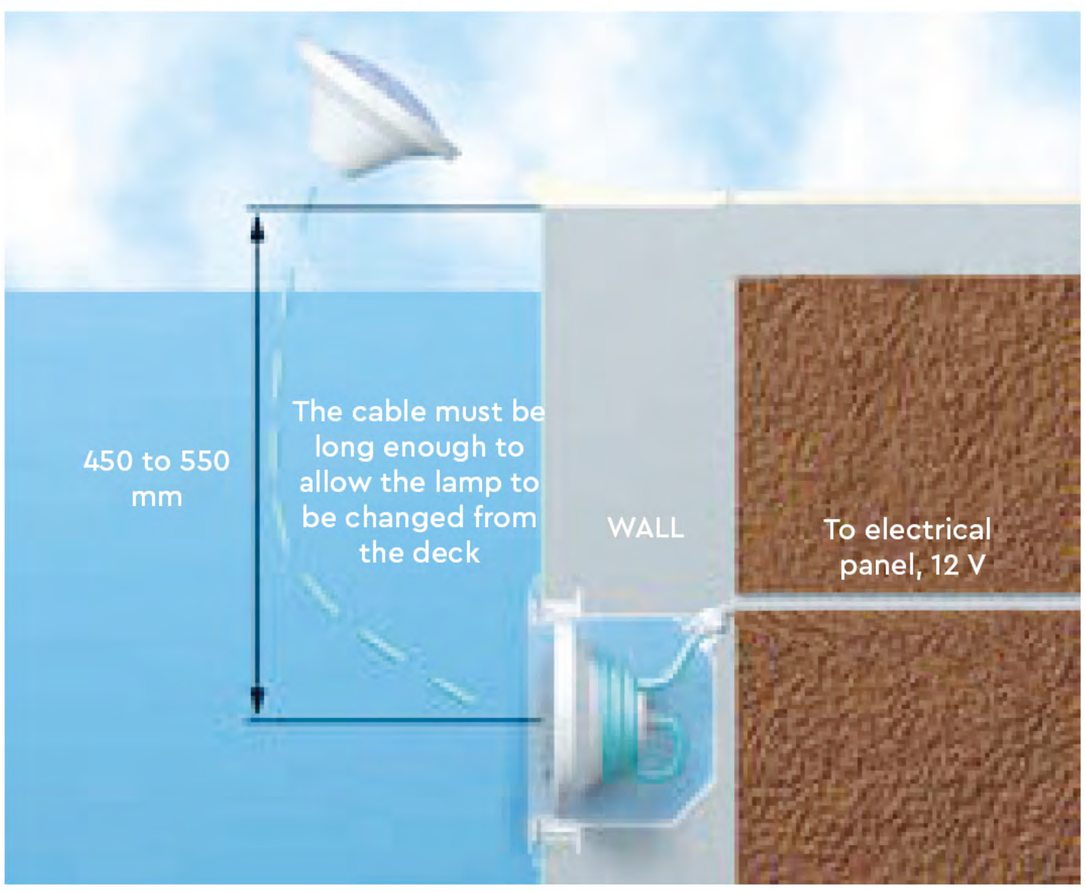

MAIN DRAIN

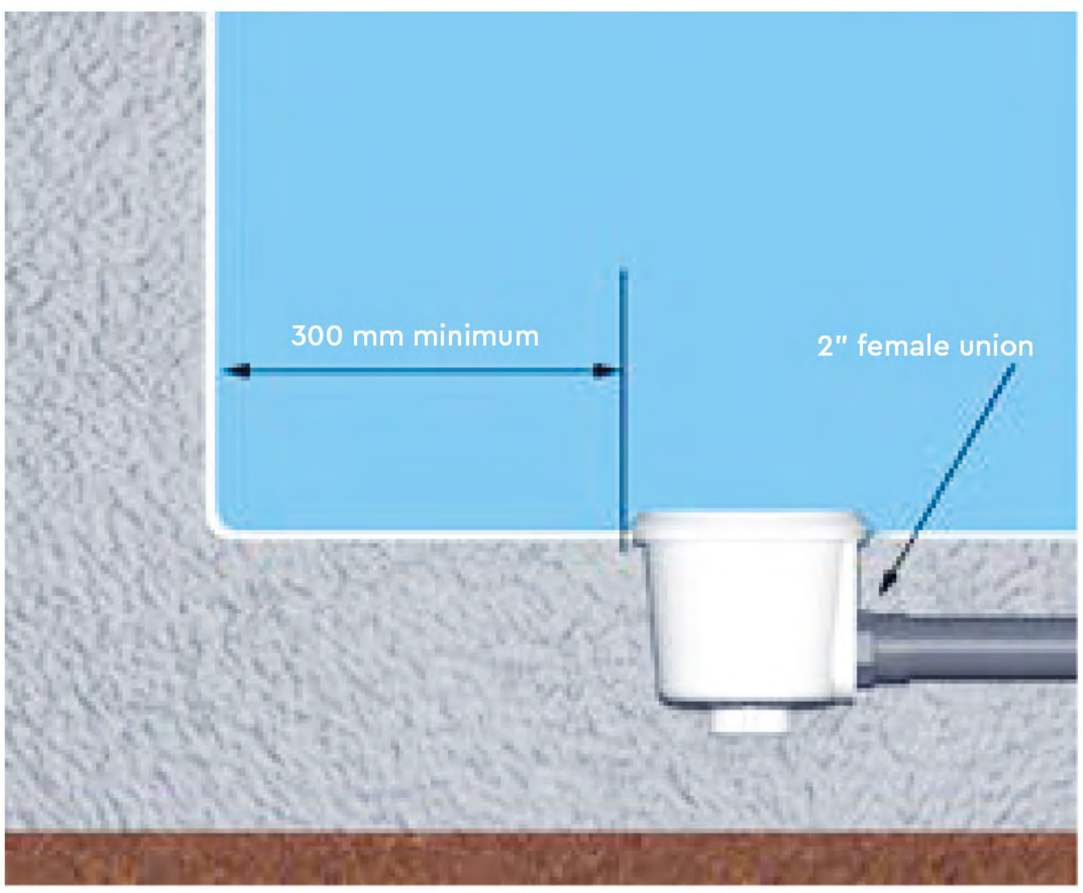

ZNPLUS STEEL POOL



Inplus Pool

BRT
POOL PRODUCTION FOCUS

Znplus

NEW GENERATION STEEL PANEL

Znplus Steel Panel is produced with special galvanized.

Galvanized coating provides unprecedented protection against surface current, even in the harshest environments has level.

It has a unique chemical composition containing 9.5% zinc and aluminum.

It has an unprecedented level corrosion protection on the surface, even in harsh environments.

BRT STEEL PANEL
Best Quality Best Quality Best Quality Best Quality Best Quality Best Quality

ZNPLUS STEEL PANEL

Resistant, Durable , Economical, Lightweight,
Offer Architectural Freedom, Safe, Saves Time.

It is suitable for recycling. It is in an easily portable structure.

The facts that steel is a durable material is both flexible and light, making steel panel pools and solid makes it.

Steel panel pool is almost 10 times lighter than reinforced concrete pools.

This situation reduces the strain of steel panel pools during earthquakes, thus making them more resistant to earthquakes compared to reinforced concrete pools.

Another reason why steel panel pools are durable is the use of galvanized steel in their production.

So much so that galvanization, which has an anti-rust effect, has a feature that can protect the structure from many adverse conditions in the open air.

In addition, the galvanized steel panel pool is also known for its high corrosion resistance.

However, steel panel pools, although durable, can cause many problems due to inadequate technique and incomplete controls on the market.

For this reason, it is benefical to work with a company that is expert in its field and knows its business.

ZNPLUS BUILDING TECHNOLOGY

ZNPLUS Steel Panel Swimming Pools

BRT's latest technologies, all new pool used in the making of our designs.

Our systems are built by BRT to offer a guarantee for every pool it It's a big part of being happy.

Manufacturing and Engineering

Quality available in multiple shapes and sizes with our industry proven ZNPLUS steel wall, our liner swimming pools, swimming pool set the standard in the industry.

At BRT, our innovative production method and advanced extremely proud of our engineering capabilities we hear. Znplus systems, old welded the latest in our industry, replacing systems represents the production method.

The panels are made of galvanized steel.
Both straight and curved wall
panels, providing positive and accurate alignments strategically placed holes at both ends
has.

Flat panels, industry standard twisted pair providing much greater strength than the panel It is created using the ZNPLUS method.

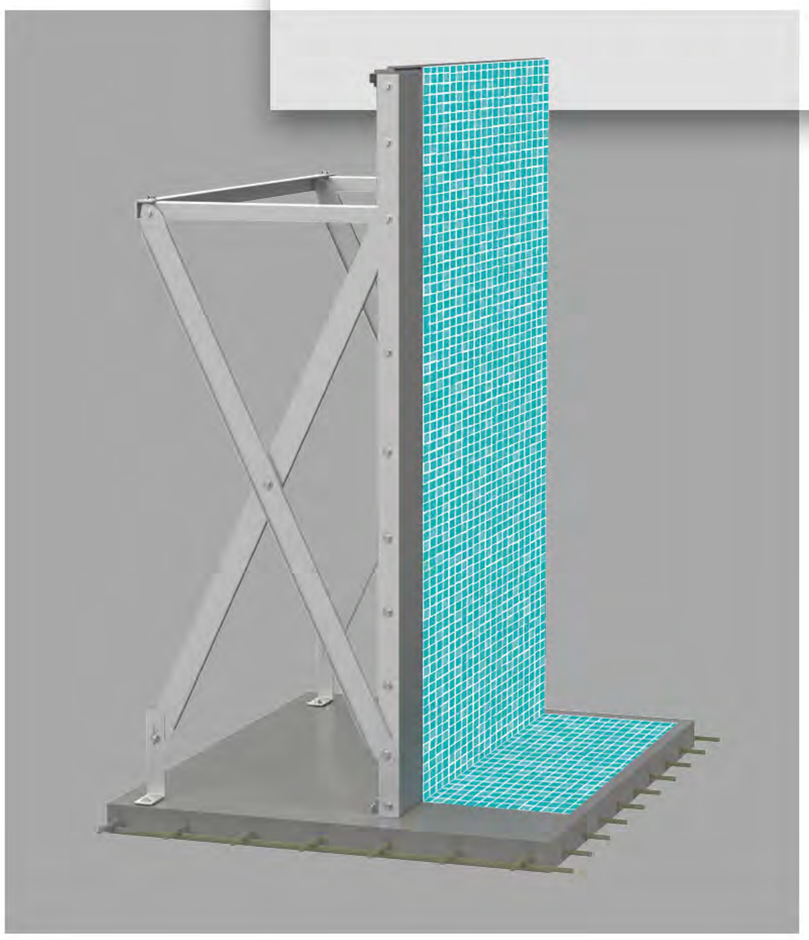

THE MOST DURABLE STEEL USED IN POOL CONSTRUCTION IS LABORATORY TESTED ANY APPROVED.

Tested by an independent laboratory (LNEG -LMR) and exposed to a brine vapor champer, these panels have proven to be the most durable steel used in the construction of swimming pools, retaining all their properties.

ZNPLUS NEW GENERATION STEEL PANEL

UP TO 10 TIMES MORE DURABLE THAN NORMAL STEEL

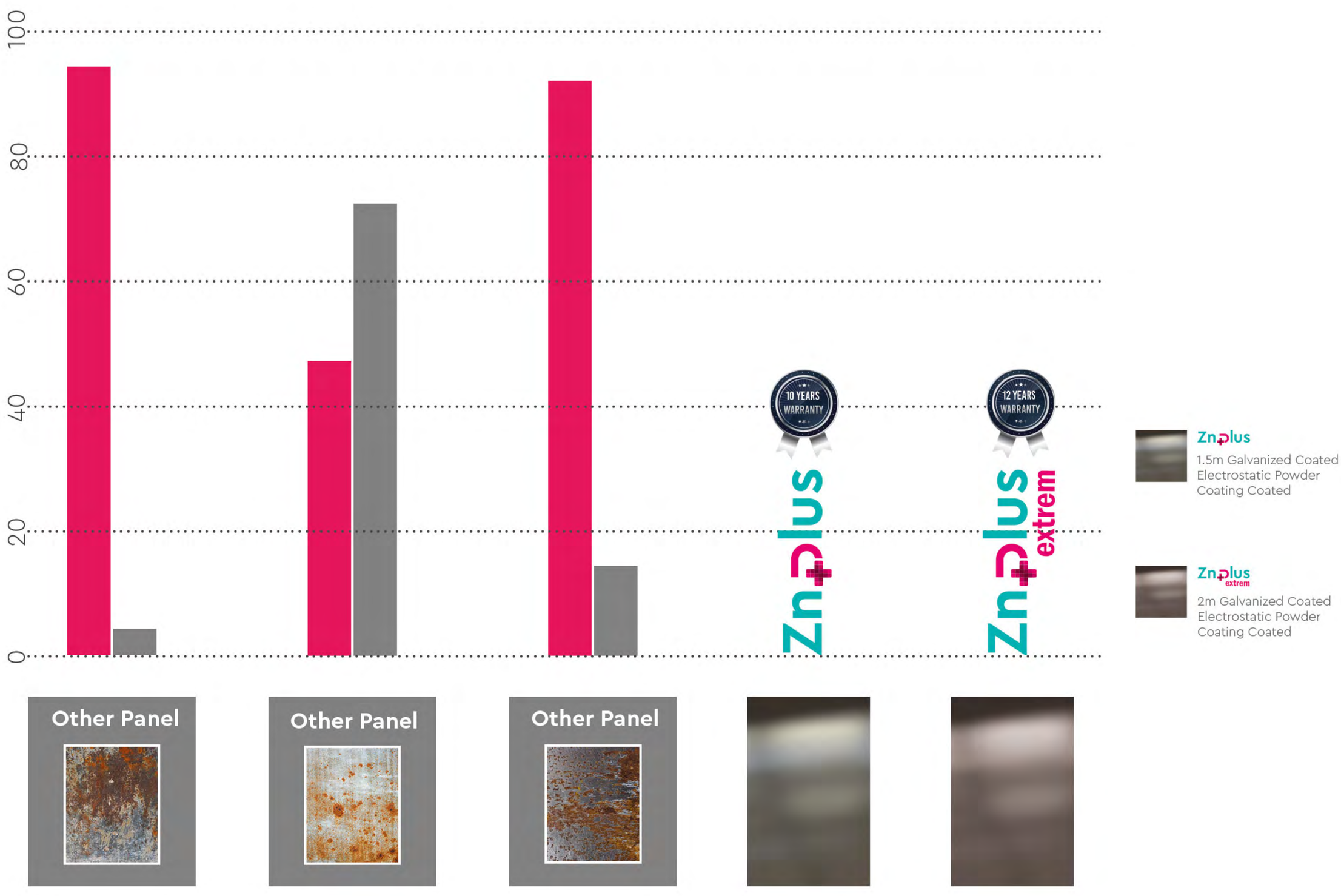

ZNPLUS Steel Panel Assembly

BEWARE OF IMITATIONS

Test carried out by independent laboratories analyzed different types of steel used in the construction of swimming pool.

The result could not be more clear and shows that RPI steels are the most durable of all the steels used in the construction of swimming pool.

Znplus Steel Panel

12 YEARS WARRANTY

Liner

10 YEARS WARRANTY

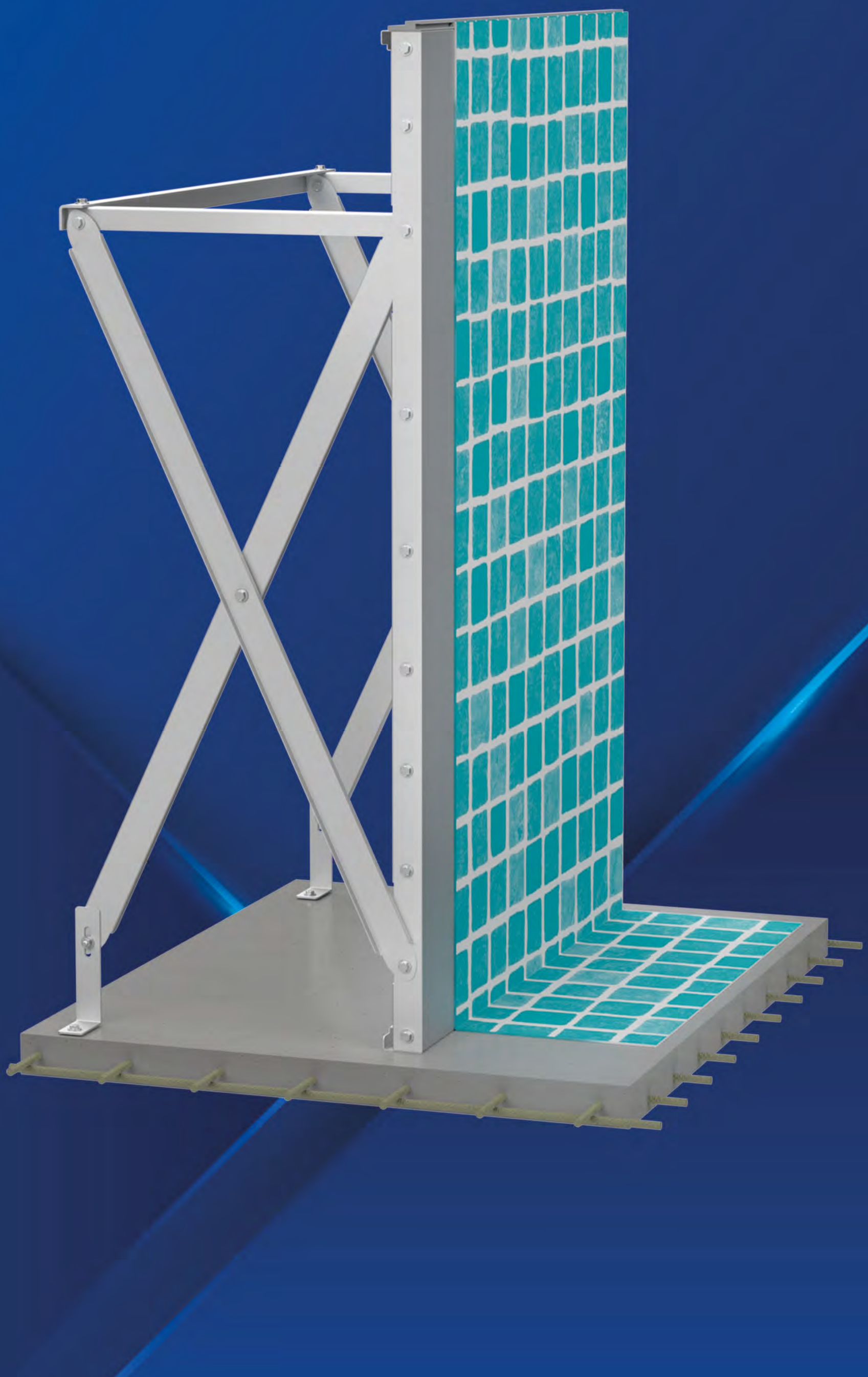

ZNPLUS

Unlimited Design



ZNPLUSflex

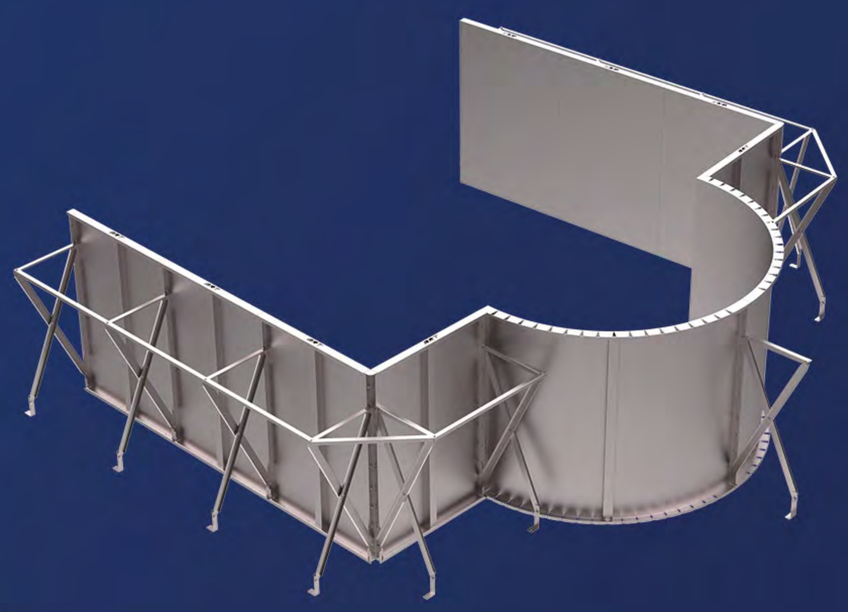

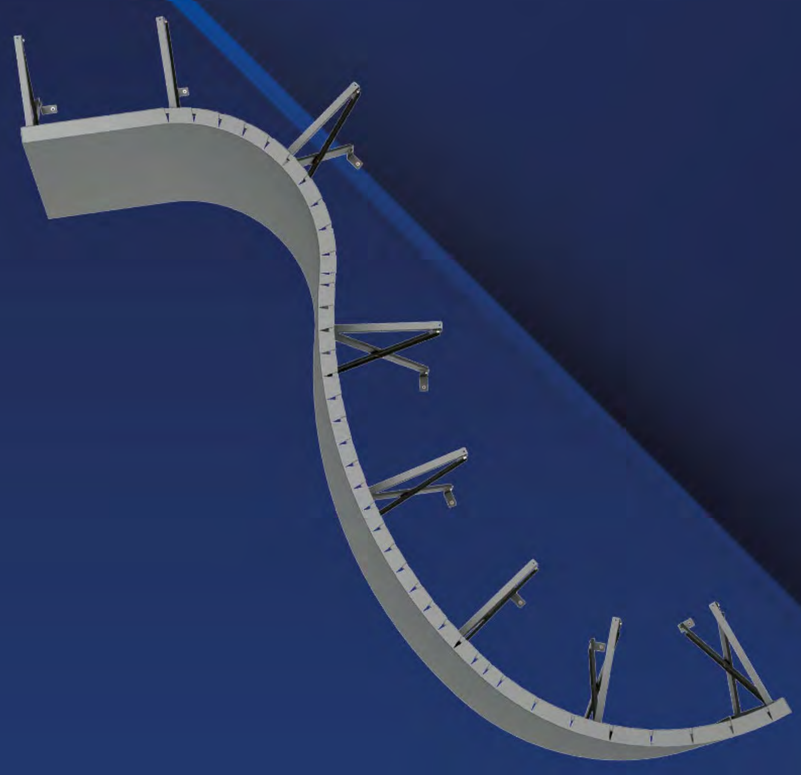



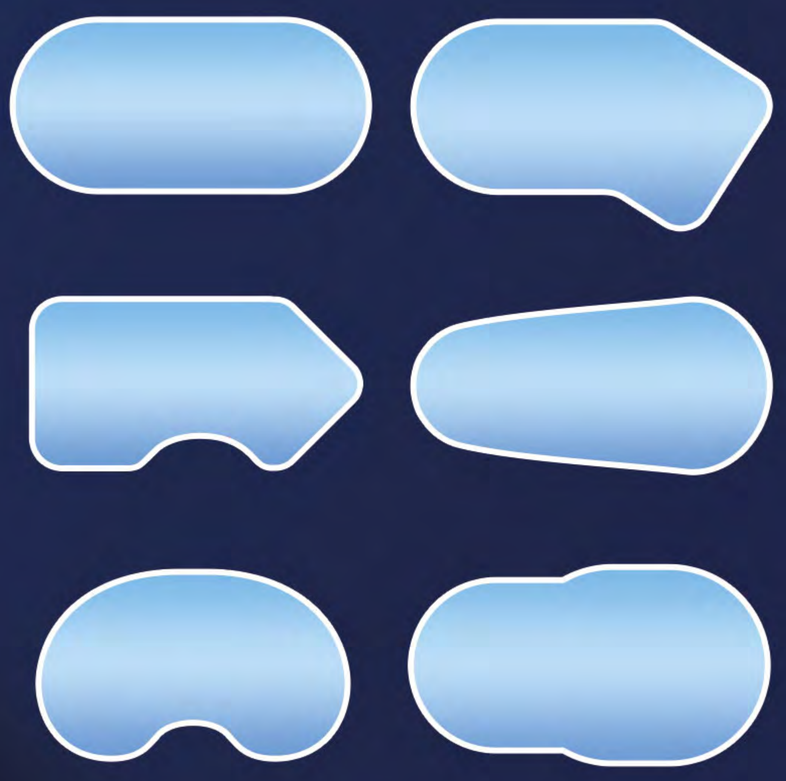



SPIEL

Znplus



Znplus Steel Panel pools are designed from independent panels.
During the assembly of the modules in the assembly process,
the supported mechanical forces are distributed between these modules.

Max width 1.00 mm

Pool Types

- Swimming Pools
- Swimming Pools
- Swimming Pools
- Pool for Kids

Panel Height

- 1,50 m
- 1,20 m
- 0,90 m
- 0,60 m



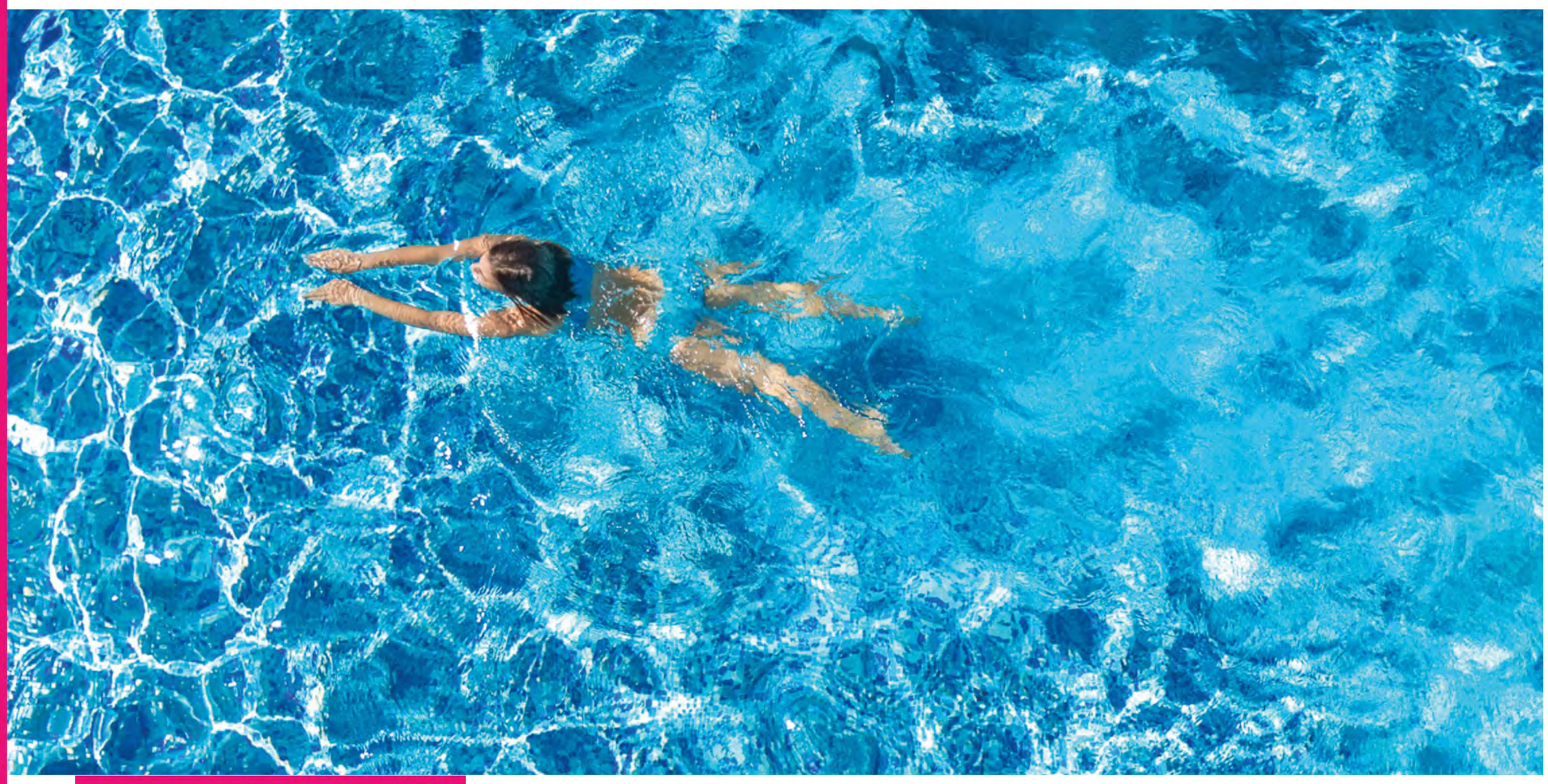



■ Optional:
LED lamp

■ Steel stainless
ladder

■ Internal parts set
Built-in skimmer



■ Pool liner blue, beige, white

■ ZNPLUS
Galvanized steel foot

■ ZNPLUS
Galvanized steel panel



■ Rot resistant synthetic fiber
Suitable for the size of the pool
with a margin of about 6 mm
White color

Znplus Steel Pool

CUSTOM MANUFACTURE

Material Description

OTHERS AVAILABLE DIMENSIONS

info@barutgroup.com.tr

								STRUCTURE P.							STANDARD PACKAGE					FILTRA. P.	C. P.	OPCIONAL
								1,5 mm GALVANİZED PANEL ,SUPPORT LEGS ,														
BASIC SET	Z1001	300	500	150	22,5	15	16	✓	✓	✓												
	Z1002	300	600	150	27	18	18	✓	✓	✓												
	Z1003	300	700	150	31,5	21	20	✓	✓	✓												
	Z1004	350	700	150	36,75	25	21	✓	✓	✓												
	Z1005	400	800	150	48	32	24	✓	✓	✓												
	Z1006	500	1000	150	75	50	30	✓	✓	✓												
	Z1007	600	1200	150	108	72	36	✓	✓	✓												
ADVANCED SET	Z1001	300	500	150	22,5	15	16	✓	✓	✓	✓	✓	✓	✓	✓	✓	✓	✓	BRT Mini400			
	Z1002	300	600	150	27	18	18	✓	✓	✓	✓	✓	✓	✓	✓	✓	✓	✓	BRT Mini500			
	Z1003	300	700	150	31,5	21	20	✓	✓	✓	✓	✓	✓	✓	✓	✓	✓	✓	BRT Mini500			
	Z1004	350	700	150	36,75	25	21	✓	✓	✓	✓	✓	✓	✓	✓	✓	✓ ✓	✓	BRT Mini620			
	Z1005	400	800	150	48	32	24	✓	✓	✓	✓	✓ ✓	✓	✓	✓	✓	✓ ✓	✓	BRT Mini620			
	Z1006	500	1000	150	75	50	30	✓	✓	✓	✓	✓ ✓	✓ ✓	✓	✓	✓	✓ ✓	✓	BRT Mini620			
	Z1007	600	1200	150	108	72	36	✓	✓	✓	✓	✓ ✓ ✓	✓ ✓ ✓	✓	✓	✓ ✓ ✓		✓	MaxiXL 760			
ALL in ONE SET	Z1001	300	500	150	22,5	15	16	✓	✓	✓	✓	✓	✓	✓	✓	✓	✓	✓	BRT Mini400	eco set 1	opcinal	opcinal
	Z1002	300	600	150	27	18	18	✓	✓	✓	✓	✓	✓	✓	✓	✓	✓	✓	BRT Mini500	eco set 1	opcinal	opcinal
	Z1003	300	700	150	31,5	21	20	✓	✓	✓	✓	✓	✓	✓	✓	✓	✓	✓	BRT Mini500	eco set 2	opcinal	opcinal
	Z1004	350	700	150	36,75	25	21	✓	✓	✓	✓	✓	✓	✓	✓	✓	✓ ✓	✓	BRT Mini620	eco set 2	opcinal	opcinal
	Z1005	400	800	150	48	32	24	✓	✓	✓	✓	✓ ✓	✓ ✓	✓	✓	✓	✓ ✓	✓	BRT Mini620	eco set 3	opcinal	opcinal
	Z1006	500	1000	150	75	50	30	✓	✓	✓	✓	✓ ✓	✓ ✓	✓	✓	✓	✓ ✓	✓	BRT Mini620	eco set 3	opcinal	opcinal
	Z1007	600	1200	150	108	72	36	✓	✓	✓	✓	✓ ✓ ✓	✓ ✓ ✓	✓	✓	✓ ✓ ✓		✓	MaxiXL 760	eco set 4	opcinal	opcinal

BRT

POOL PRODUCTION FOCUS



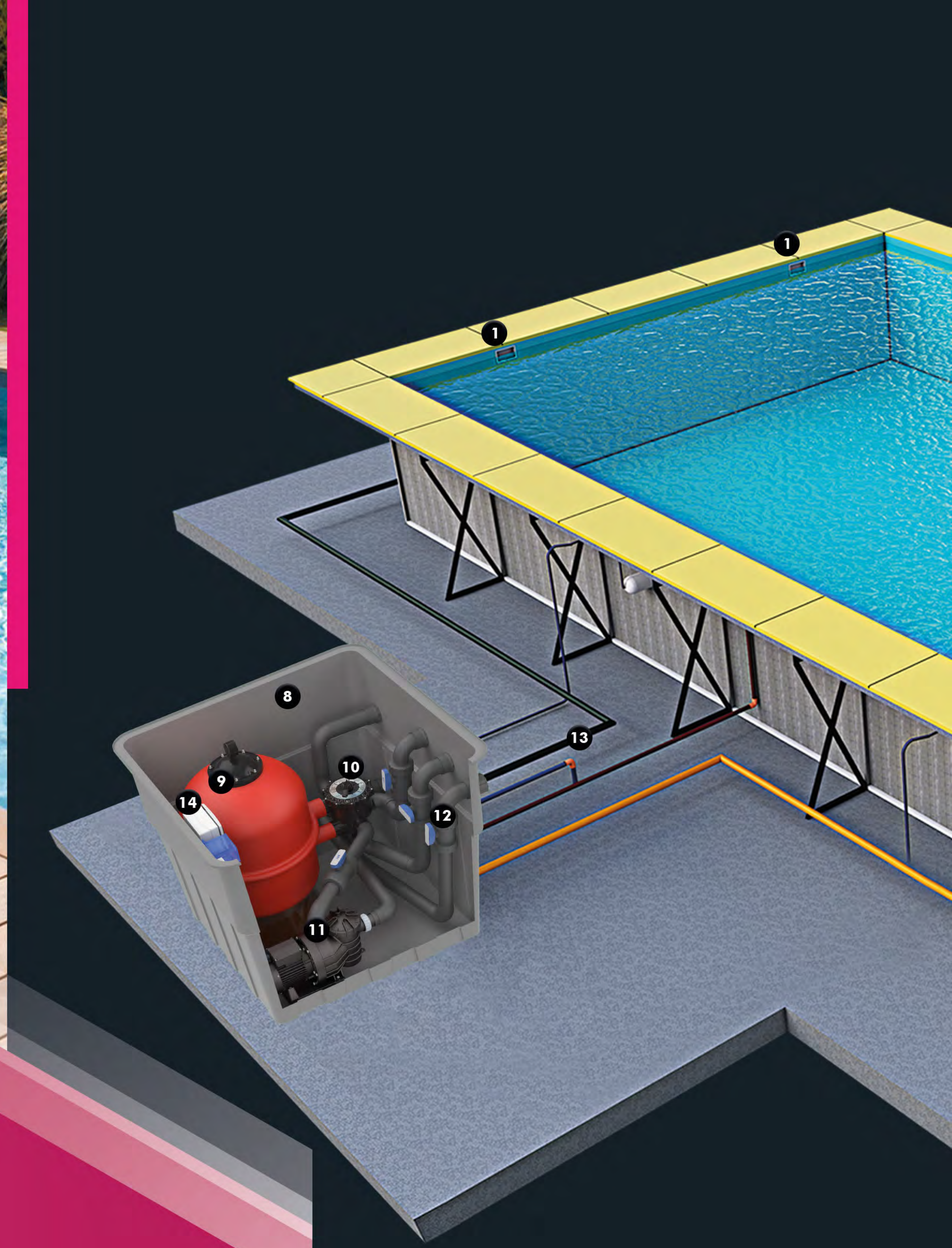

1 Skimmer
2 Nozzles
3 Bottom Drain
4 Lamps
5 Ladders
6 Steel Galvanized Legs
7 Znplus Steel Panel
8 Engine Room
9 Filters
10 Six Way Valve
11 Pump
12 Pipe
13 PVC Pipe
14 Fuse Box
15 Liner

BARUT GROUP
POOL PRODUCTION FOCUS

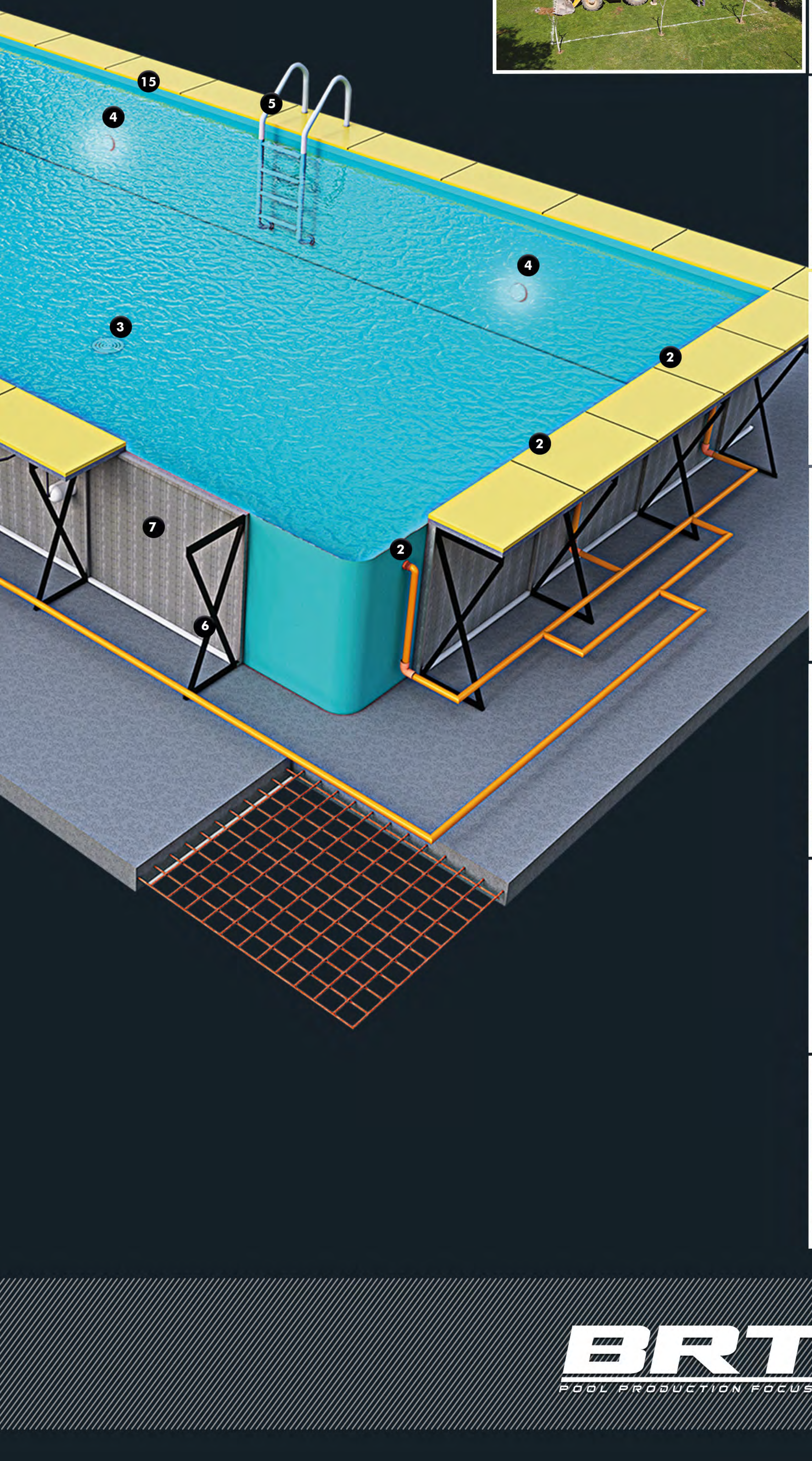

1 The pool area suitable for the project is determined and the excavation process is started according to the elevation level.

2 After reaching the appropriate depth, ground leveling is done.



3 A flat concrete suitable for the project is poured and after a day it becomes ready for assembly.



4 The body is completely formed in about 2 days and 30 cm heel concrete is placed behind the cross legs for support purposes.



5 Liner assembly is completed. Required test and final water filling process is started by making checks.



6 Environmental filling is done with the water filling process. Sand should be used in the environmental filling.



7 After the fillings are completed, the environmental concrete preparation for the landscaping is done.



8 Environmental concrete is poured according to the type of material to be applied around the pool.



BRT
POOL PRODUCTION FOCUS



Znplus

Znplus Steel Panel

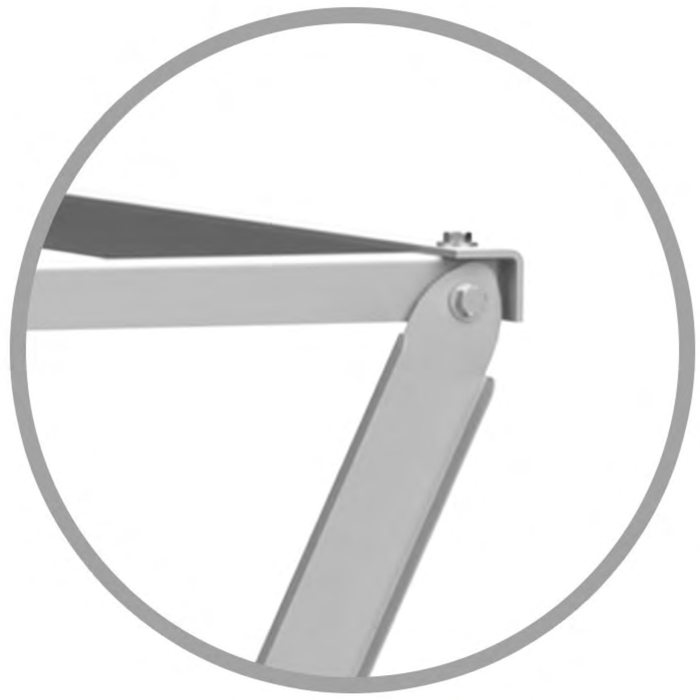

For Pool Walls
Cross Foot Supports

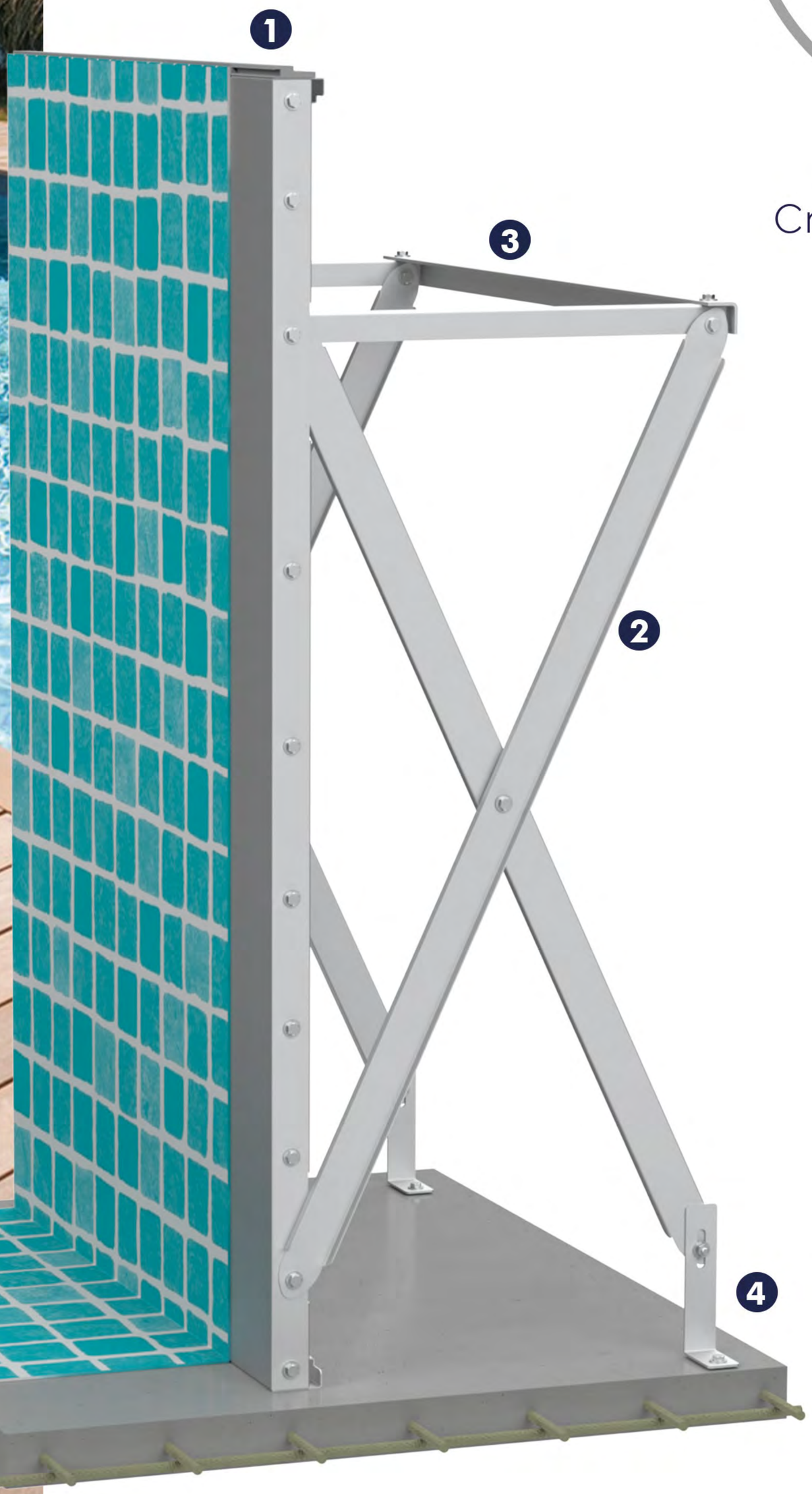

ZNPLUS PANEL
EQUIPMENT



1

LINER RAIL
Bendable Liner Rail Bends to 6" radius on inner and outer corners corner hugs are useless people.
Holds the pool liner in place part is ideal for Znplus, Fiplus and Betox pool use.
Maintaining water salinity as it is manufactured from extruded PVC It can be used and pasted.



2

ZNPLUS PANEL CROSS LEGS
An innovative modular system made of galvanized steel, supplied as an easy and quick to assemble kit.
The main feature of this technique is to provide more resistance to the pool panel



3

STEEL REAR SUPPORT LEGS
An innovative modular system made of galvanized steel, supplied as an easy and quick to assemble kit.
The main feature of this technique is to provide more resistance to the steel rear support legs.



4

ZNPLUS PANEL STEEL REAR SUPPORT LEGS
An innovative modular system made of galvanized steel, supplied as an easy and quick to assemble kit.

Znplus



IMPORTANT NOTE:

* Fast assembly is made using Znplus, steel panel.
* They have a tongue-and-groove system that simply connects to each other.
* It has a pool depth of 1.50 m.
* Skimmer and nozzle inlets are ready.
* Contains protective galvanization for walls and floors.

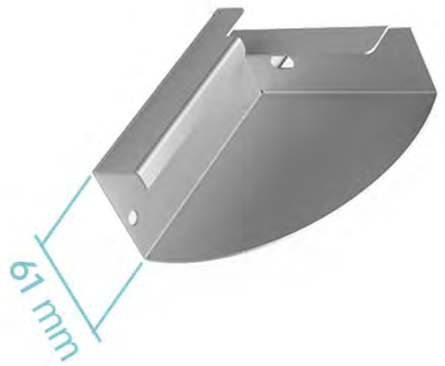
61 mm

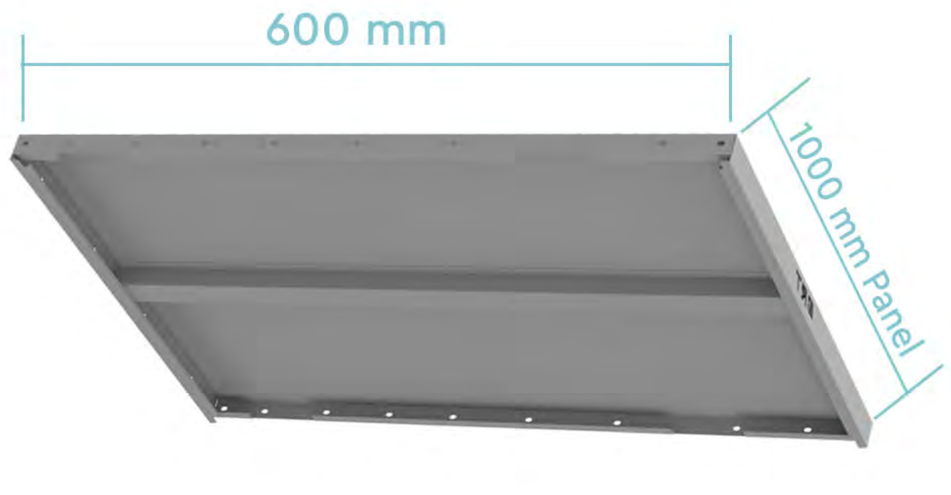
600 mm
1000 mm Panel

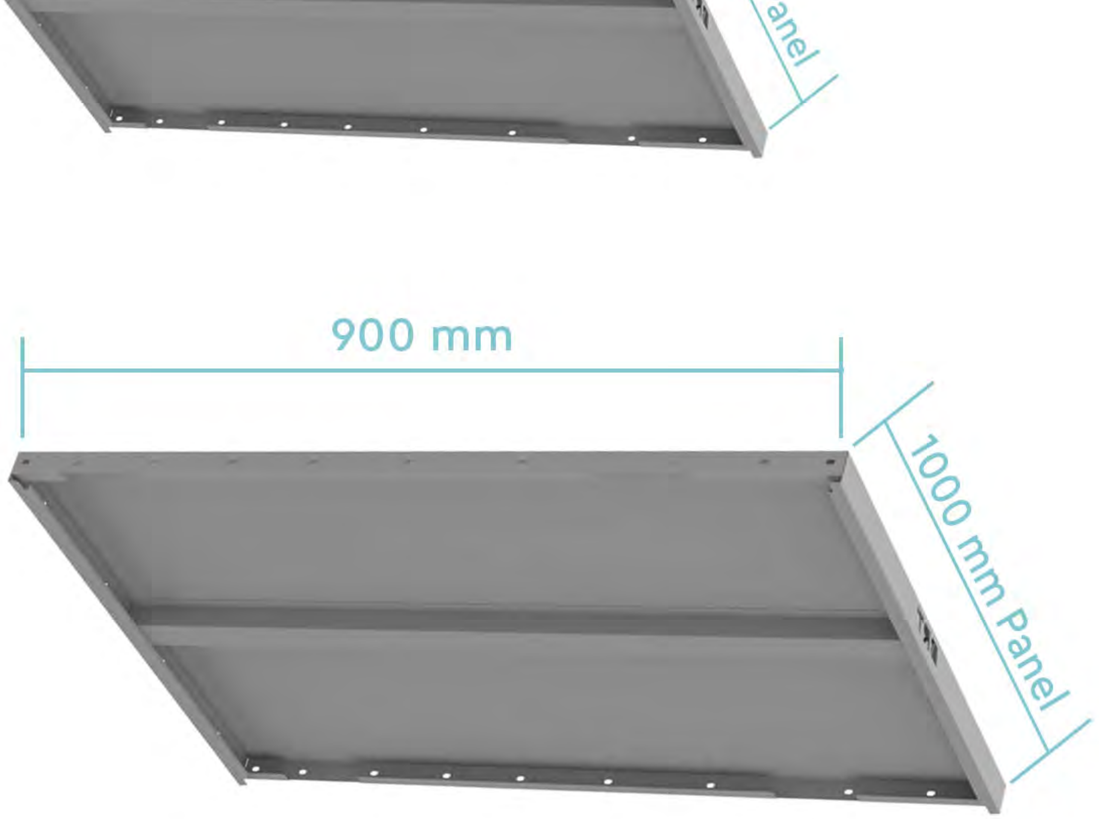
900 mm
1000 mm Panel


1200 mm
1000 mm Panel

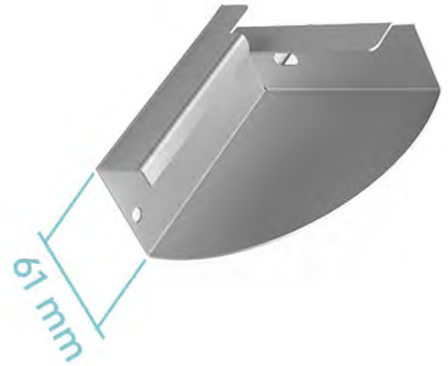
61 mm


1500 mm
1000 mm Panel

ZNPLUS

FIPLUS PANEL POOL

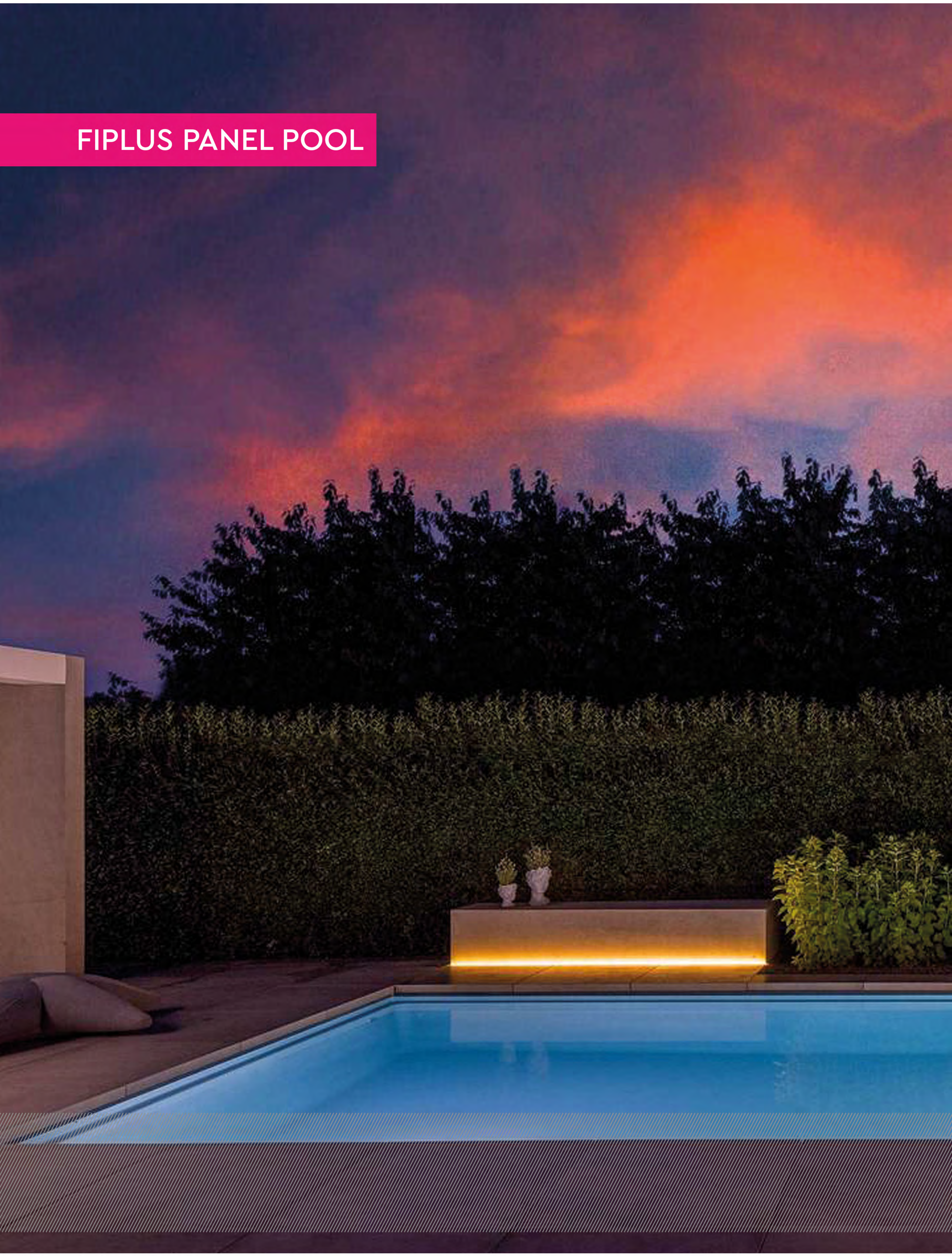

Fiplus Pool

BRT

POOL PRODUCTION FOCUS

FIPLUS PANEL POOL

Inground



Above Ground

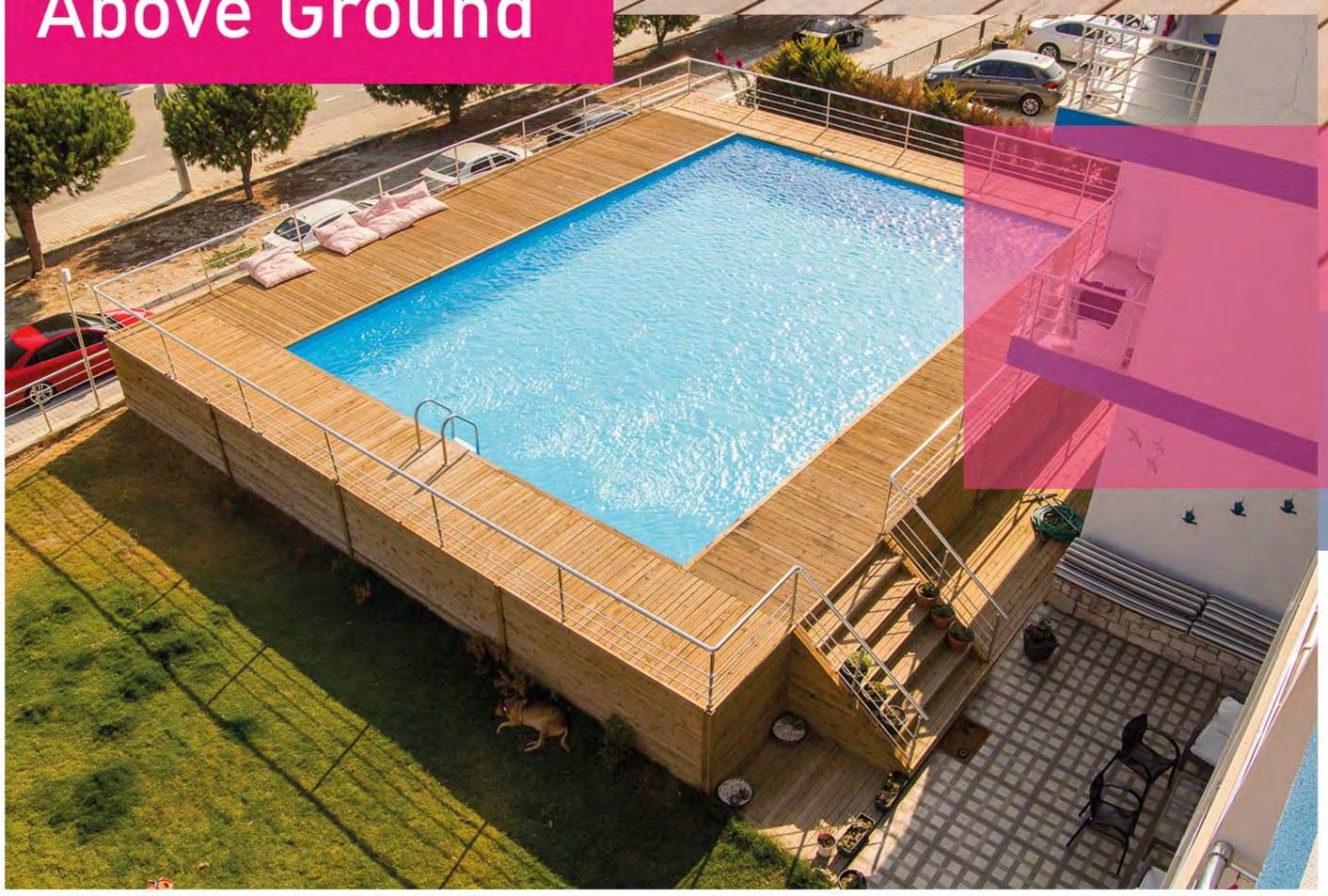

IMPORTANT NOTE:

There is no size and size limitation in our Fiplus pool systems.

Production can be made in any size, form and size you want.

The prefabricated panel pool systems we apply; The technology used in the construction of swimming pools is based on the principle of minimizing costs by constructing pools of desired shapes and sizes, with all their functions, in the strongest way and in a short time.

Fiplus panel pool

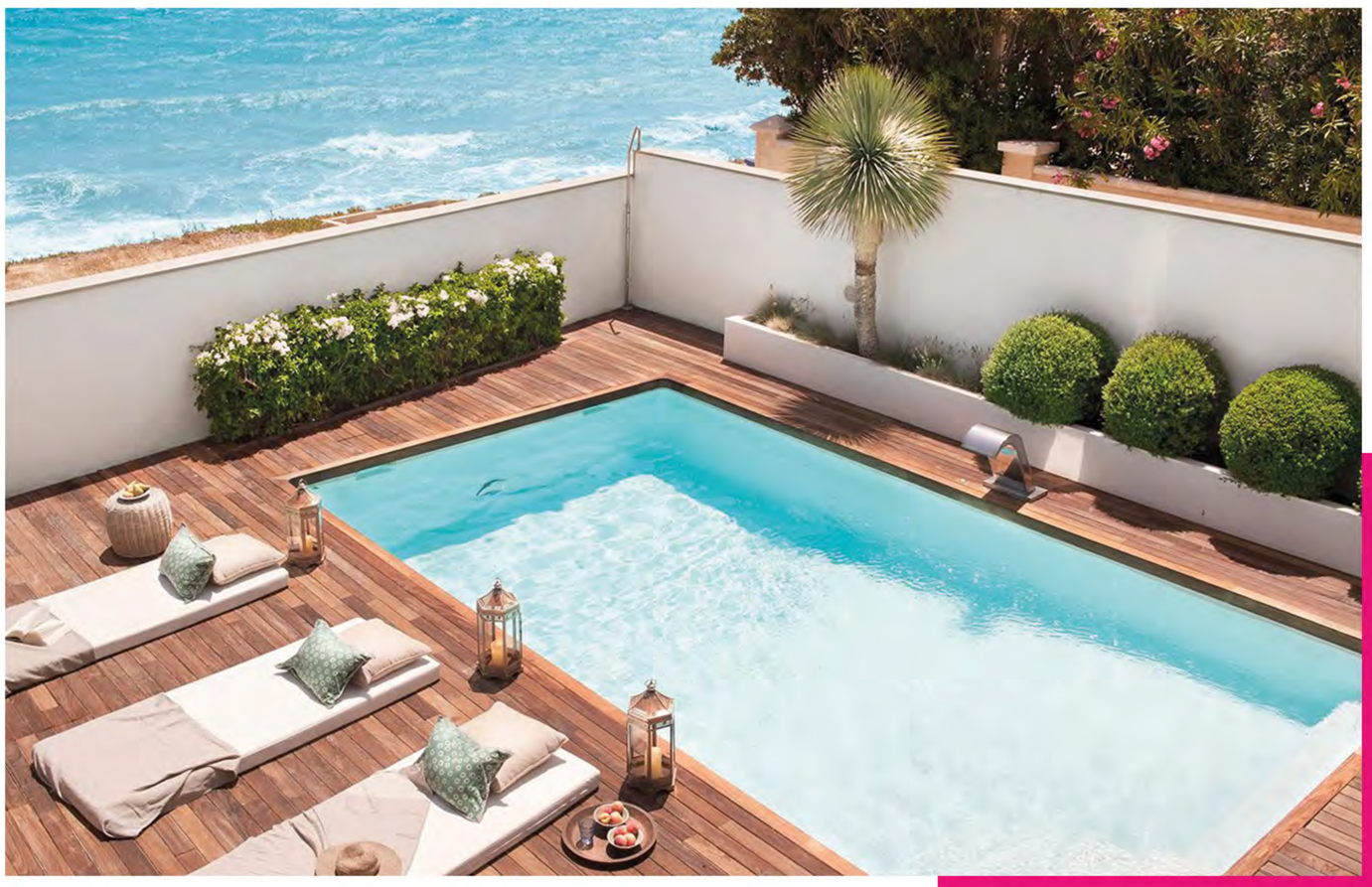

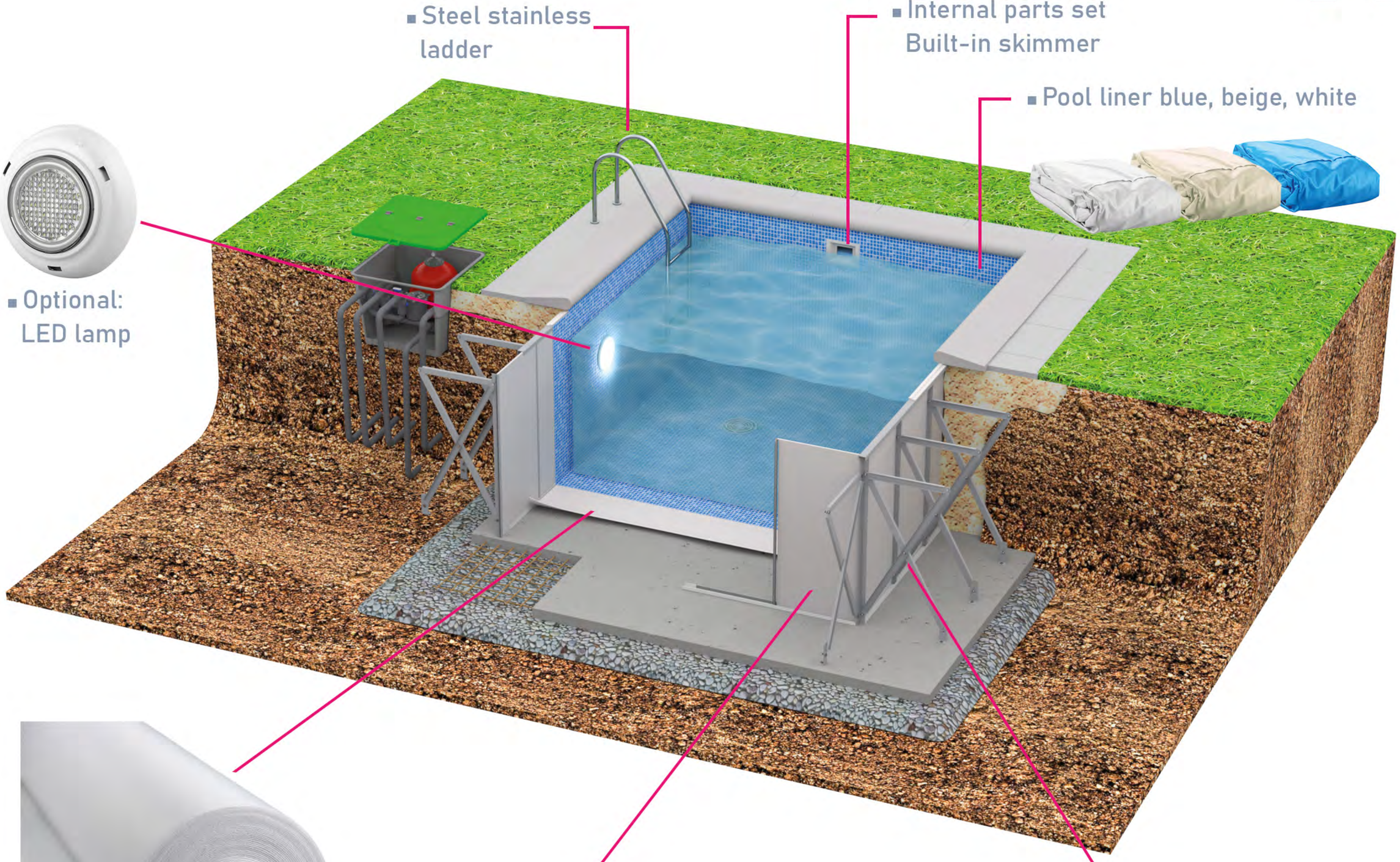



Rot resistant synthetic fiber
Suitable for the size of the pool with a margin of about 6 mm
White color

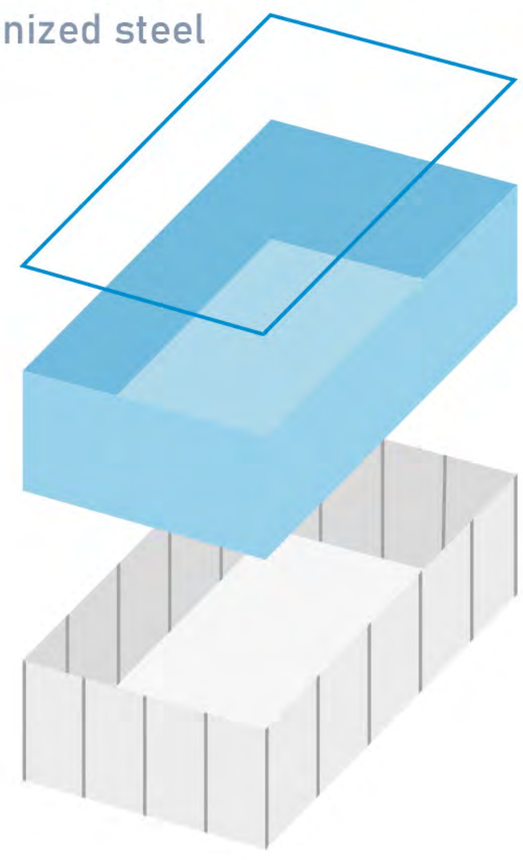

Fiplus



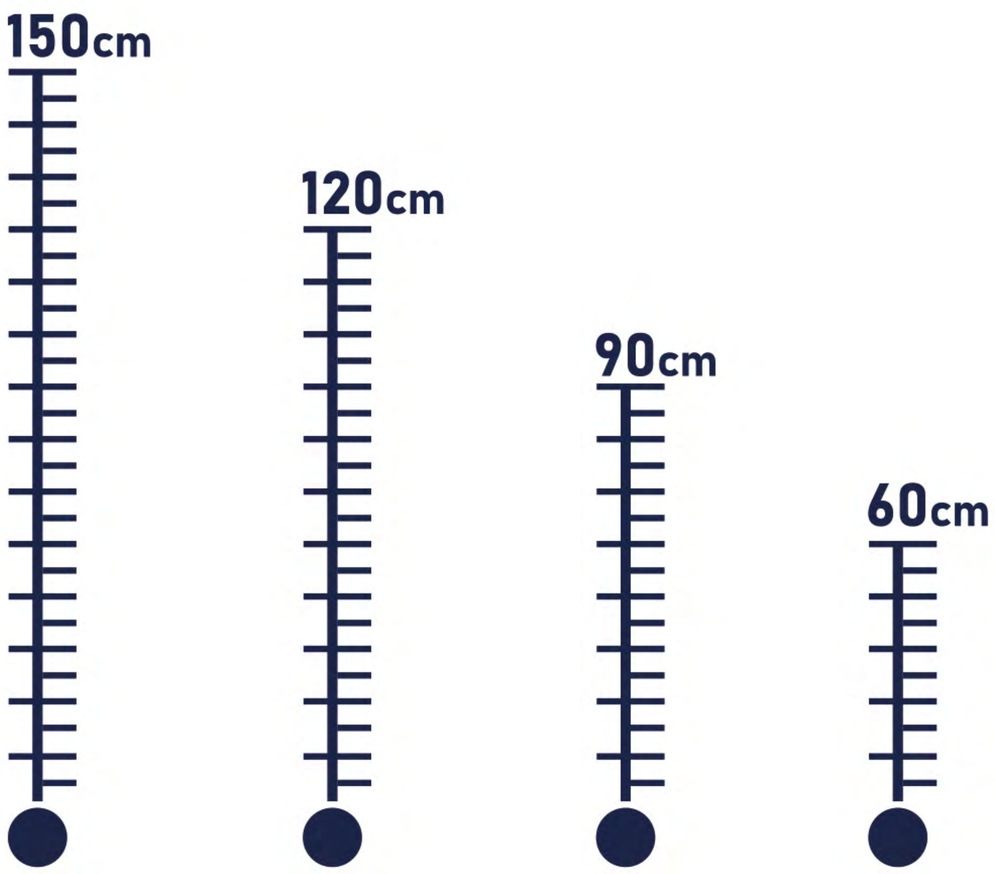

- Choose the set you want
  You can also choose the round pool in different variants and sets.
  Different lengths and heights, liner coating, set options and liner colors.



Fiplus panel pool 150



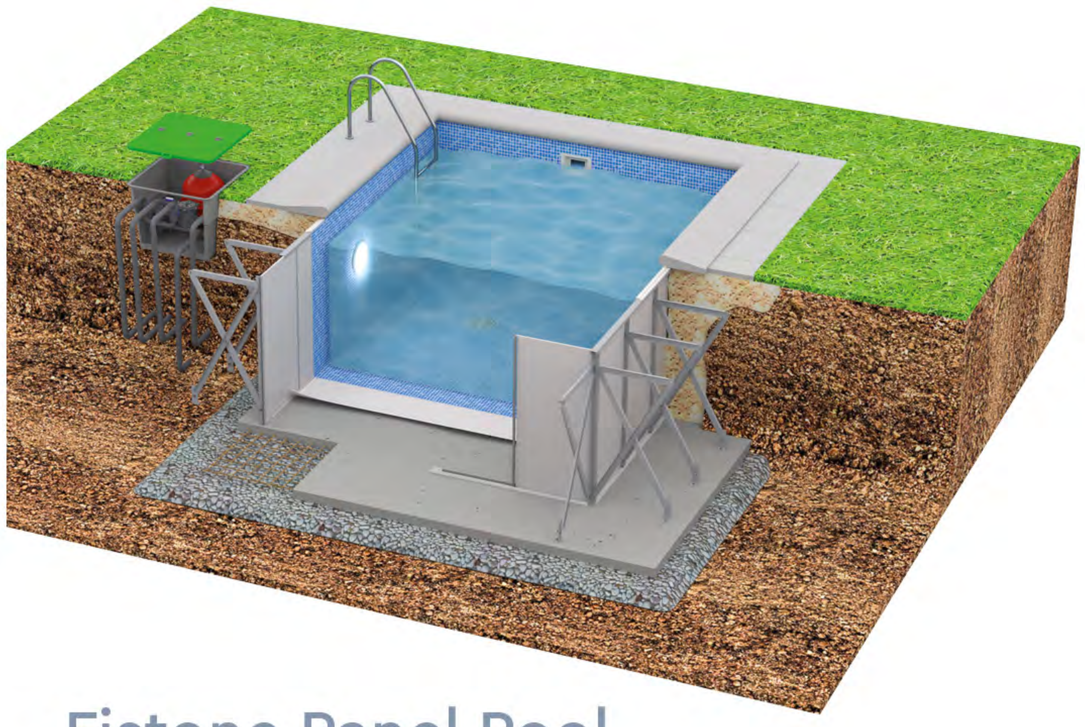

Fistone Panel Pool

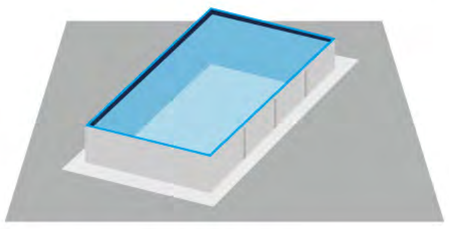

- Above ground
- 150 cm deep



- Above ground & Inground
- Fistone panel
- Galvanized cross legs
- Wall thickness 1.5 mm

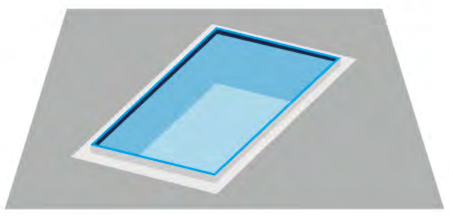

- Inground
- 150 cm Deep

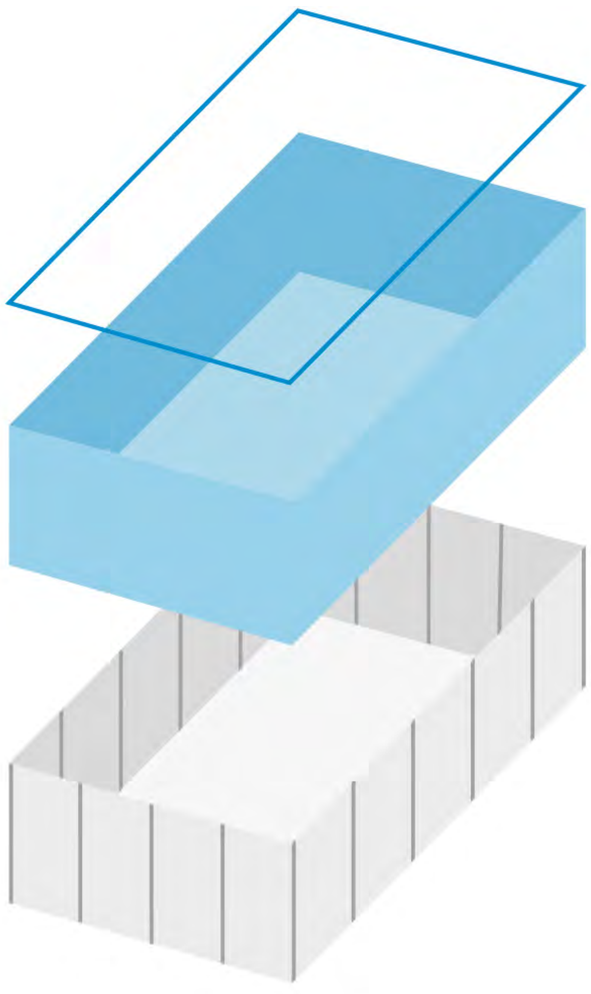

	CODE	DIMENSION	VOLUME	PVC RAIL	0,7mm LINER	H PROFILE LOCK	SKIMMER NOZUL SET	GEOTEXTILE	FILTRATION SET	LADDER	PUMP	SOLARFOLI
Beginer Set	F1001	Ø 300X150	V. 45	✓	✓	✓	–	–	–	–	–	–
	F1002	Ø 350X150	V. 45	✓	✓	✓	–	–	–	–	–	–
	F1003	Ø 400X150	V. 45	✓	✓	✓	–	–	–	–	–	–
	F1004	Ø 450X150	V. 45	✓	✓	✓	–	–	–	–	–	–
	F1005	Ø 500X150	V. 45	✓	✓	✓	–	–	–	–	–	–
	F1006	Ø 600X150	V. 45	✓	✓	✓	–	–	–	–	–	–
Advanced Set	F1001	Ø 300X150	V. 45	✓	✓	✓	✓	✓	✓	–	–	–
	F1002	Ø 350X150	V. 45	✓	✓	✓	✓	✓	✓	–	–	–
	F1003	Ø 400X150	V. 45	✓	✓	✓	✓	✓	✓	–	–	–
	F1004	Ø 450X150	V. 45	✓	✓	✓	✓	✓	✓	–	–	–
	F1005	Ø 500X150	V. 45	✓	✓	✓	✓	✓	✓	–	–	–
	F1006	Ø 600X150	V. 45	✓	✓	✓	✓	✓	✓	–	–	–
Professional Set	F1001	Ø 300X150	V. 45	✓	✓	✓	✓	✓	✓	✓	✓	–
	F1002	Ø 350X150	V. 45	✓	✓	✓	✓	✓	✓	✓	✓	–
	F1003	Ø 400X150	V. 45	✓	✓	✓	✓	✓	✓	✓	✓	–
	F1004	Ø 450X150	V. 45	✓	✓	✓	✓	✓	✓	✓	✓	–
	F1005	Ø 500X150	V. 45	✓	✓	✓	✓	✓	✓	✓	✓	–
	F1006	Ø 600X150	V. 45	✓	✓	✓	✓	✓	✓	✓	✓	–

FIPLUS F-STONE BUILDING TECHNOLOGY

FIPLUS F-stone Panel Swimming Pools

BRT's latest technologies are used in the construction of all our new pool designs. Steel reinforced multi-purpose carrier feet made of galvanized steel sheet from a specially made mold are cut from any point and a pool is made at the desired height. F-stone panels, which are the most important parts of the bearing walls of our pools, are the closest product to concrete. The structure of the fibercement panels we use in the F-stone Panel pool; It is made of a mixture of silica sand, cement and binders with a process and is released to the market after firing. Silica sand is the main raw material of glass. Fibercement panels also have the ability of glass to resist atmospheric effects. Our panels are rustproof, non-deformable, germ-proof and resistant to underground effects.



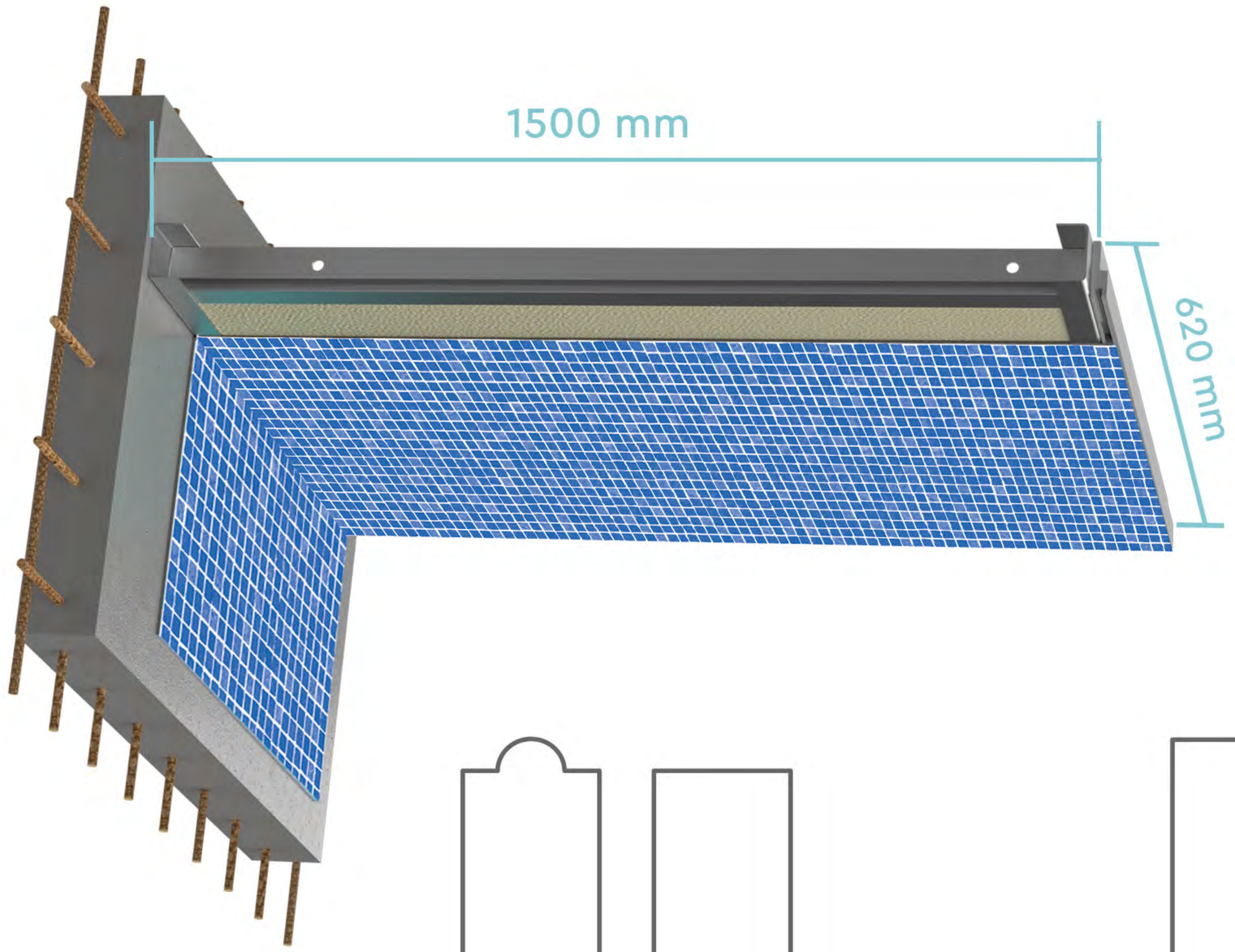
1500 mm
620 mm

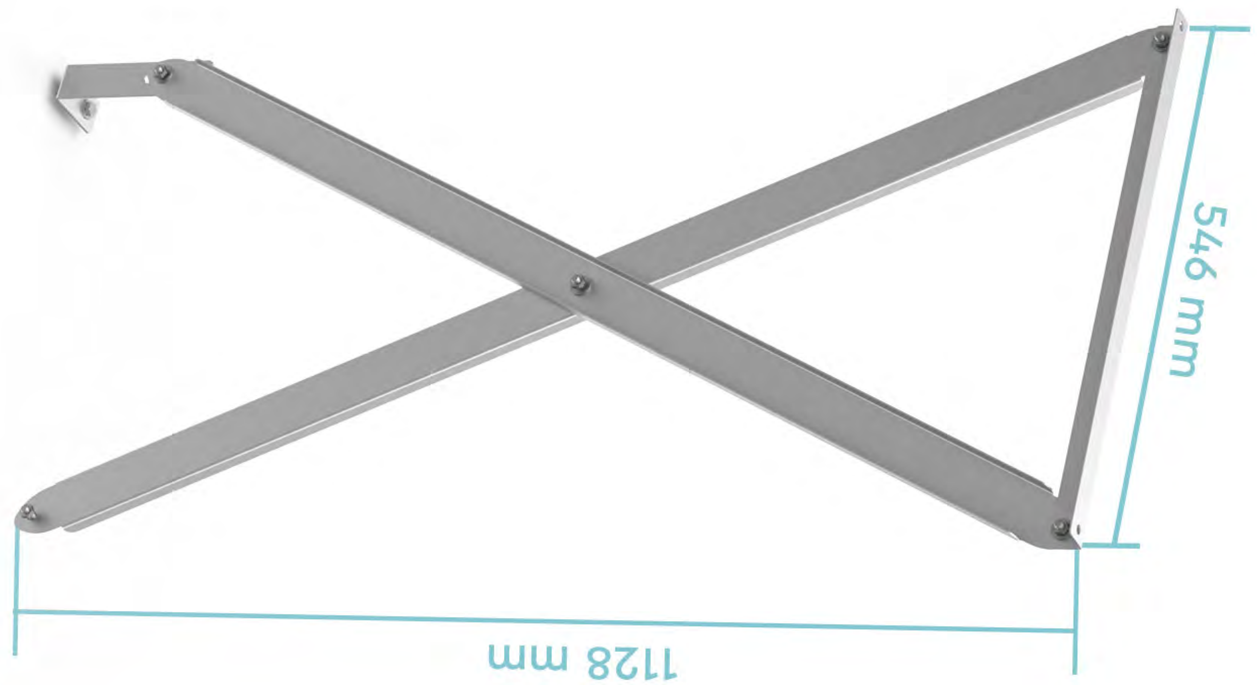
546 mm
1128 mm

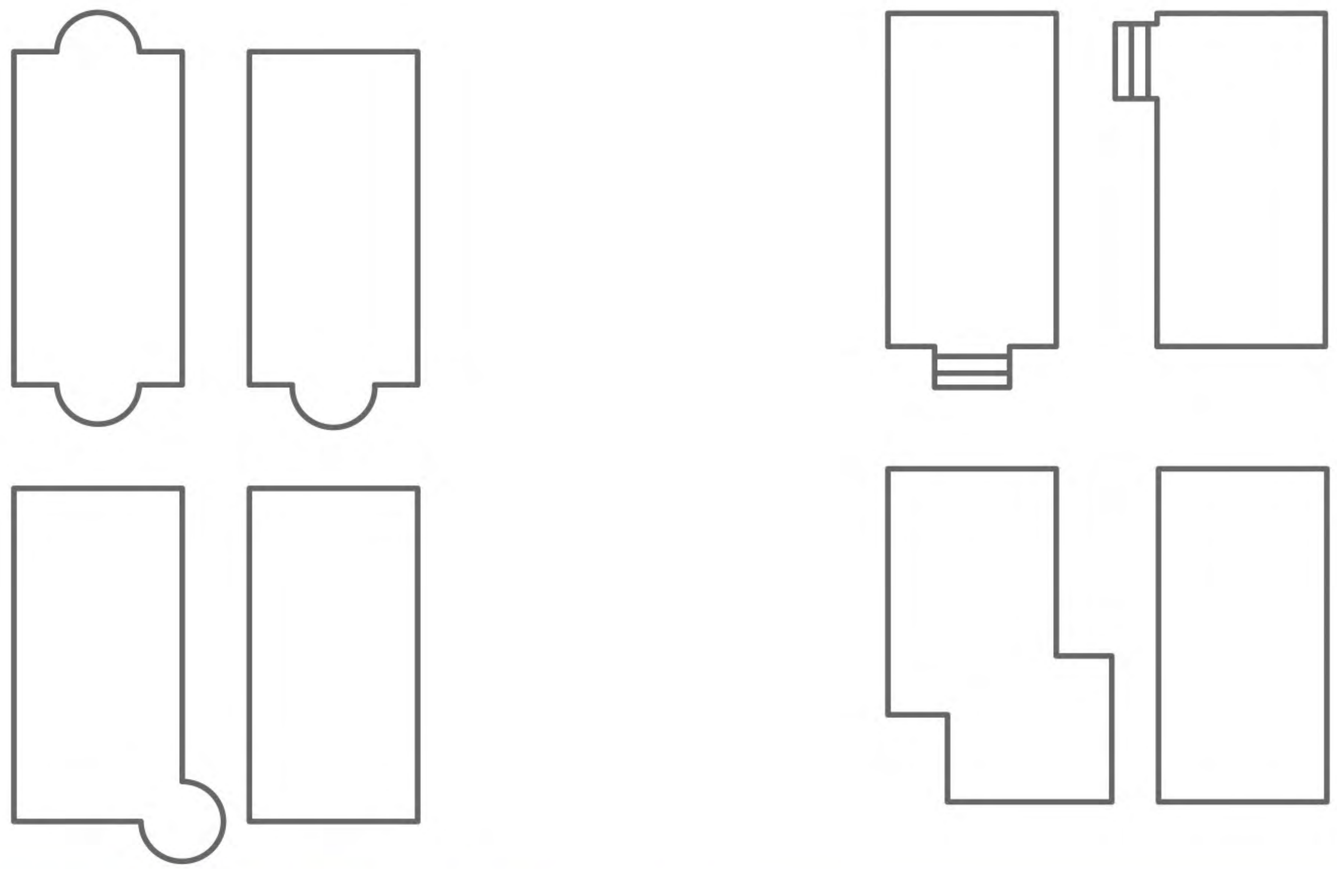

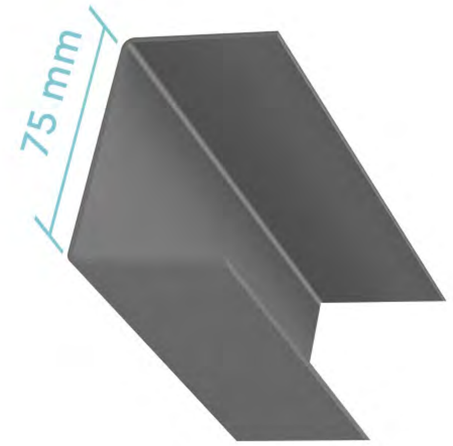
75 mm


FIPLUS

Fiplus



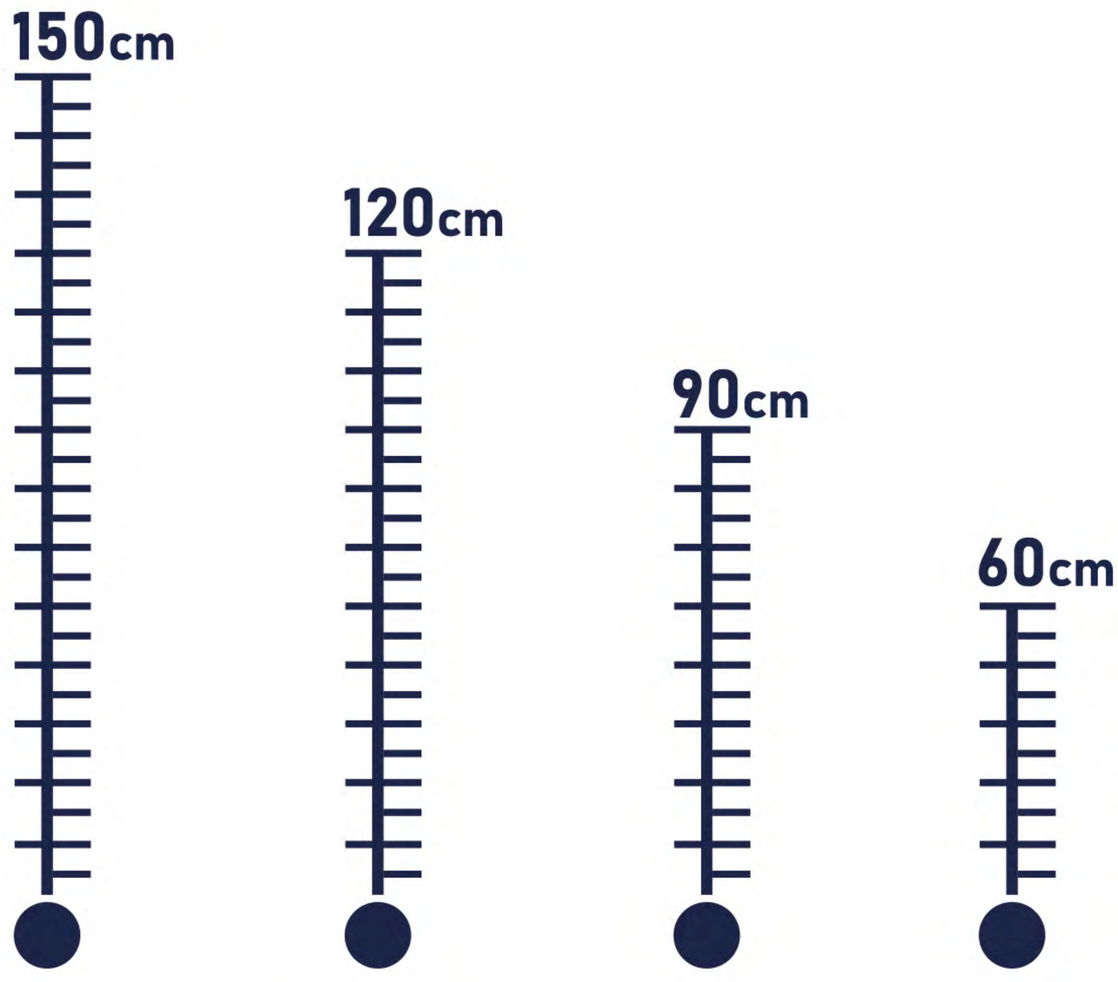

- Choose the set you want
  You can also choose the round pool in different variants and sets.
  Different lengths and heights, liner coating, set options and liner colors.









Round Steel Pool

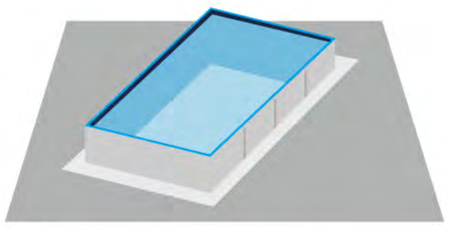

- Above ground
- 120 cm deep

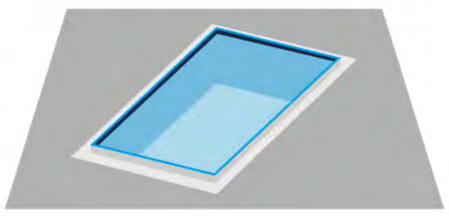

- Inground
- 120 cm Deep



- Above ground & Inground
- Fistone panel
- Galvanized cross legs
- Wall thickness 1.5 mm



Fiplus panel pool 120

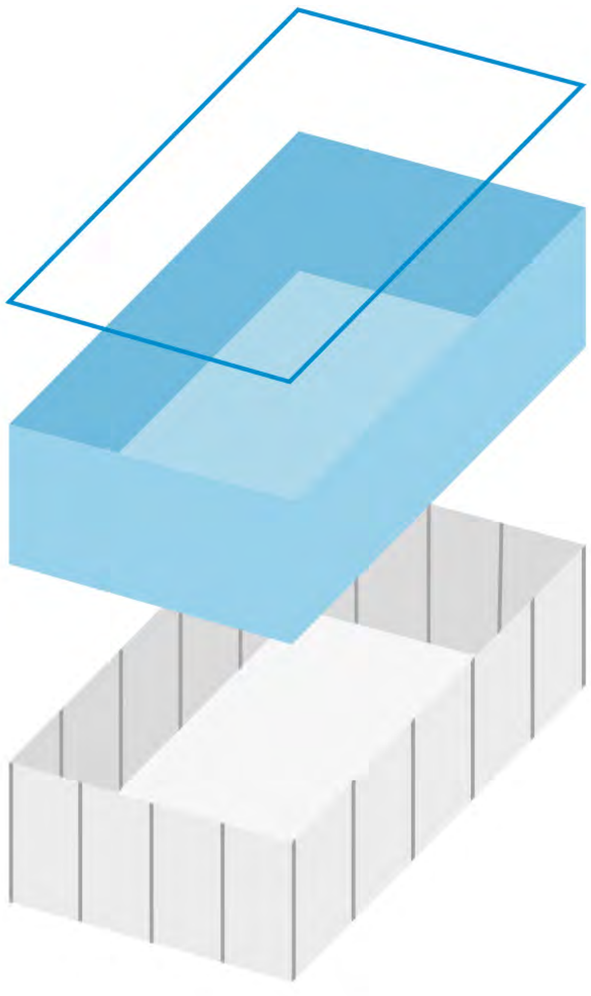

	CODE	DIMENSION	VOLUME	PVC RAIL	0,7mm LINER	H PROFILE LOCK	SKIMMER NOZUL SET	GEOTEXTILE	FILTRATION SET	LADDER	PUMP	SOLARFOLI
Beginer Set	F1001	Ø 300X120	V. 45	✓	✓	✓	–	–	–	–	–	–
	F1002	Ø 350X120	V. 45	✓	✓	✓	–	–	–	–	–	–
	F1003	Ø 400X120	V. 45	✓	✓	✓	–	–	–	–	–	–
	F1004	Ø 450X120	V. 45	✓	✓	✓	–	–	–	–	–	–
	F1005	Ø 500X120	V. 45	✓	✓	✓	–	–	–	–	–	–
	F1006	Ø 600X120	V. 45	✓	✓	✓	–	–	–	–	–	–
Advanced Set	F1001	Ø 300X120	V. 45	✓	✓	✓	✓	✓	✓	–	–	–
	F1002	Ø 350X120	V. 45	✓	✓	✓	✓	✓	✓	–	–	–
	F1003	Ø 400X120	V. 45	✓	✓	✓	✓	✓	✓	–	–	–
	F1004	Ø 450X120	V. 45	✓	✓	✓	✓	✓	✓	–	–	–
	F1005	Ø 500X120	V. 45	✓	✓	✓	✓	✓	✓	–	–	–
	F1006	Ø 600X120	V. 45	✓	✓	✓	✓	✓	✓	–	–	–
Professional Set	F1001	Ø 300X120	V. 45	✓	✓	✓	✓	✓	✓	✓	✓	–
	F1002	Ø 350X120	V. 45	✓	✓	✓	✓	✓	✓	✓	✓	–
	F1003	Ø 400X120	V. 45	✓	✓	✓	✓	✓	✓	✓	✓	–
	F1004	Ø 450X120	V. 45	✓	✓	✓	✓	✓	✓	✓	✓	–
	F1005	Ø 500X120	V. 45	✓	✓	✓	✓	✓	✓	✓	✓	–
	F1006	Ø 600X120	V. 45	✓	✓	✓	✓	✓	✓	✓	✓	–



2 After reaching the appropriate depth, ground leveling is done.



1 The pool area suitable for the project is determined and the excavation process is started according to the elevation level.



3 A flat concrete suitable for the project is poured and after a day it becomes ready for assembly.



4 The body is completely formed in about 2 days and 30 cm heel concrete is placed behind the cross legs for support purposes.



5 Liner assembly is completed. Required test and final water filling process is started by making checks.



6 Environmental filling is done with the water filling process. Sand should be used in the environmental filling.



7 After the fillings are completed, the environmental concrete preparation for the landscaping is done.



8 Environmental concrete is poured according to the type of material to be applied around the pool.

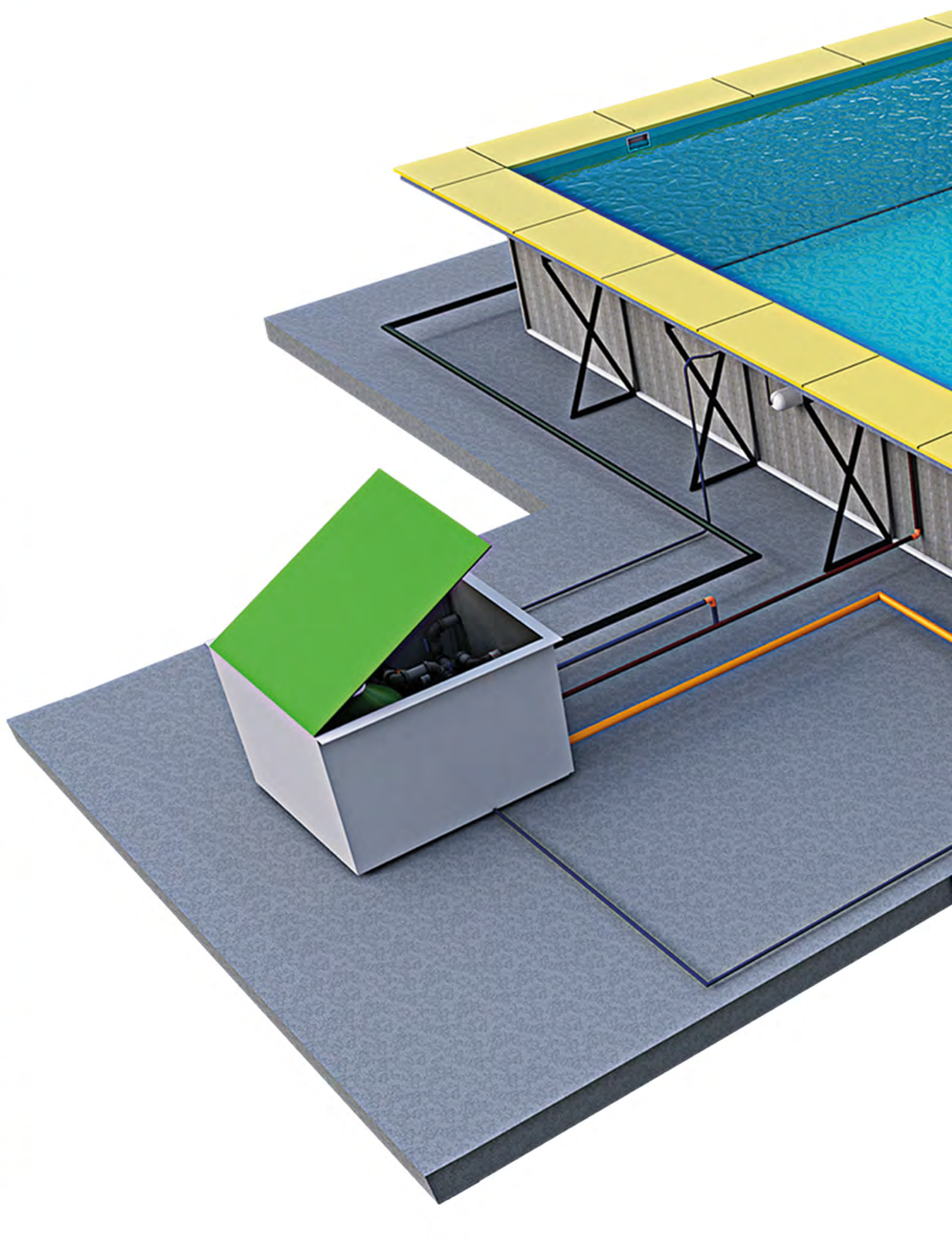

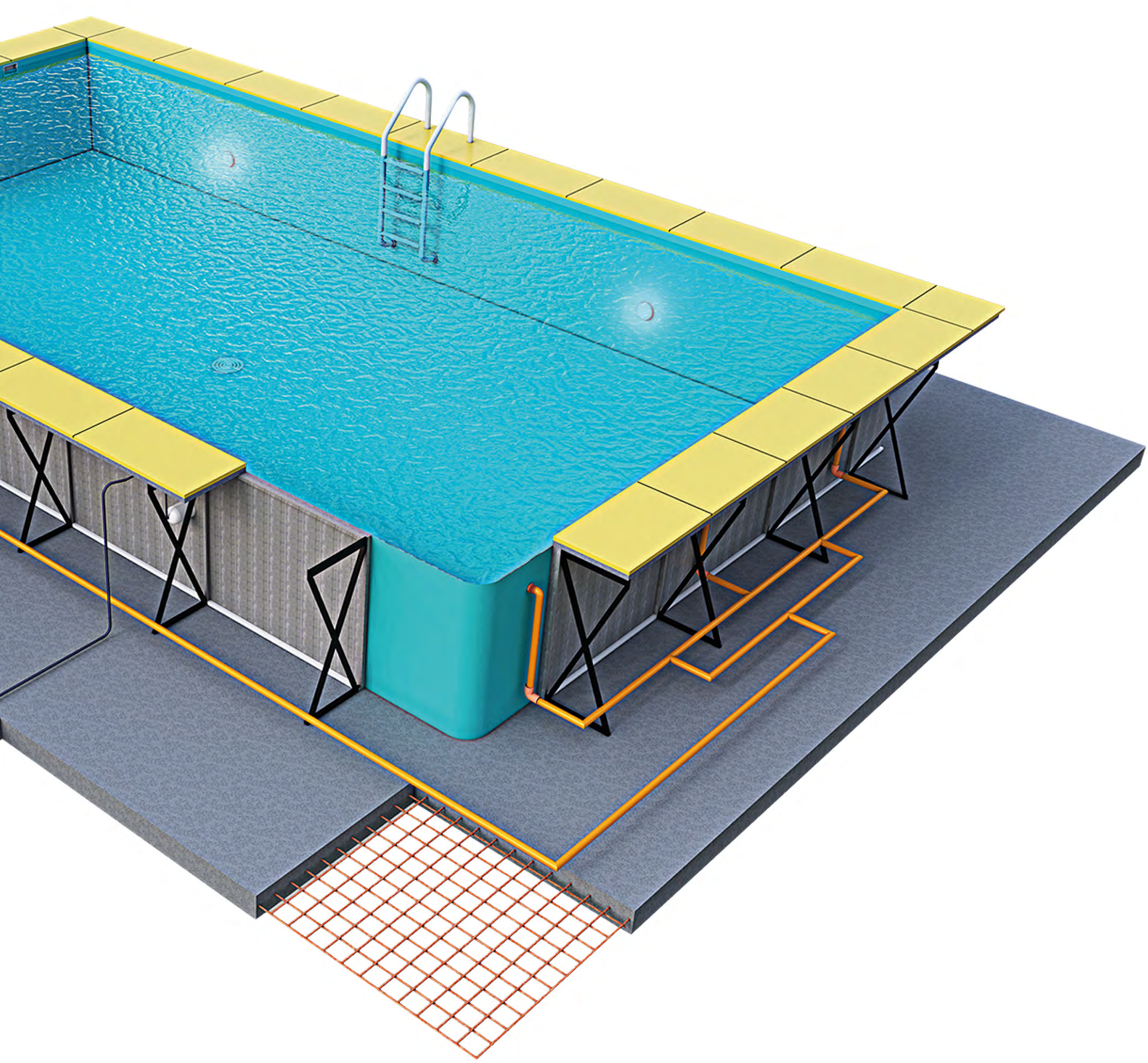

MALDIV STEEL POOL IN OVAL FORM



Maldiv pool

BRT
POOL PRODUCTION FOCUS

MALDIV





IMPORTANT NOTE:
In addition to the world standard 1.5m height in pools, production can be made in different heights such as 120cm, 90cm and 60cm, which are needed for different reasons. Pools deeper than 1.5 m are considered risky as per the standards, and it is obligatory to have a lifeguard in the public areas.

Maldiv Steel Pool



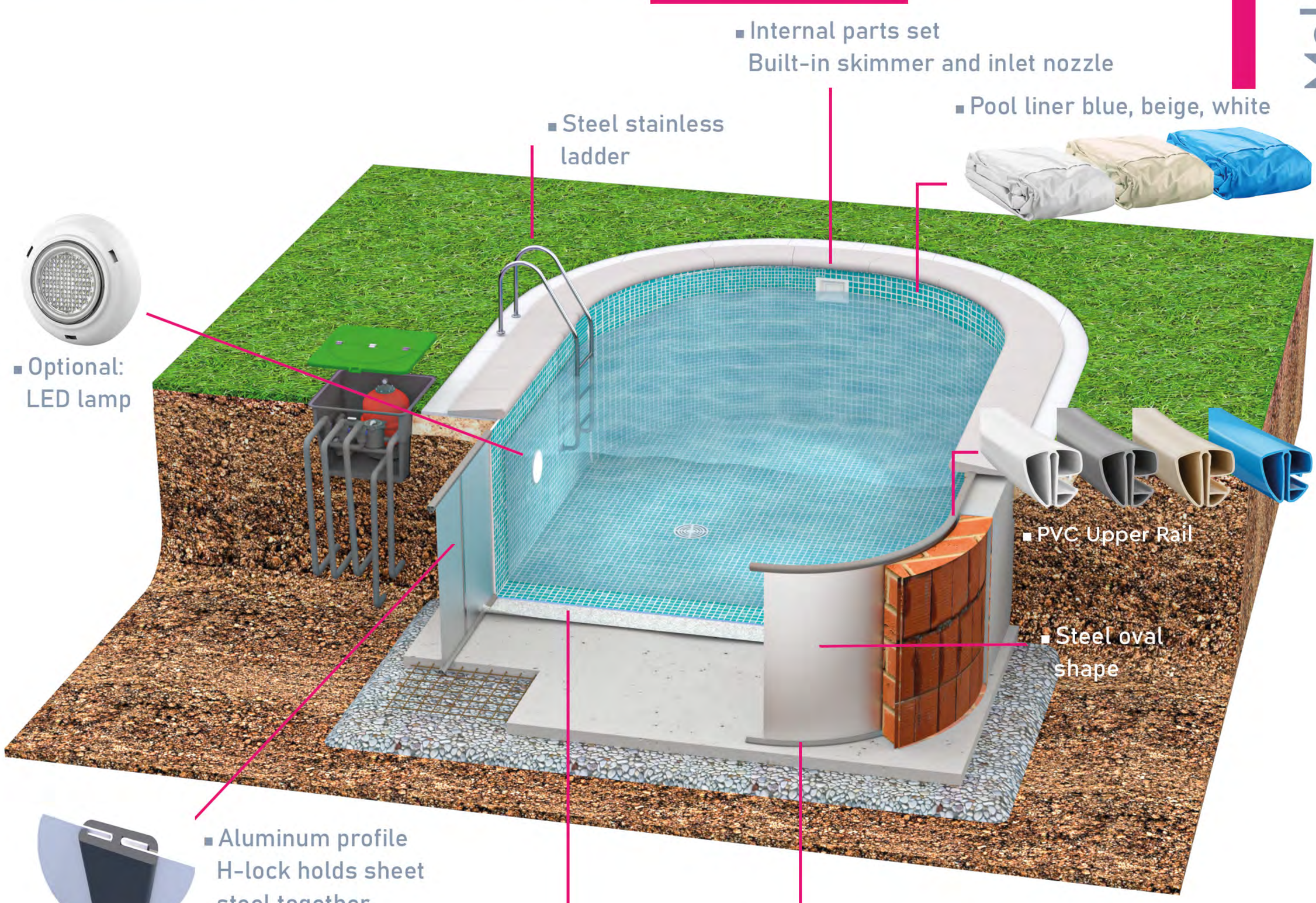

■ Aluminum profile
H-lock holds sheet steel together

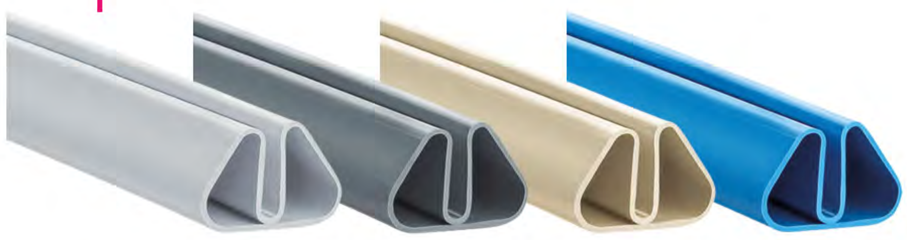

■ Easy Change PVC Bottom Rail - Different Variants
PVC bottom rails are available in different color options.
Color blue, beige, white, gray





■ Rot resistant synthetic fiber
Suitable for the size of the pool with a margin of about 6 mm
White color

MALDIV



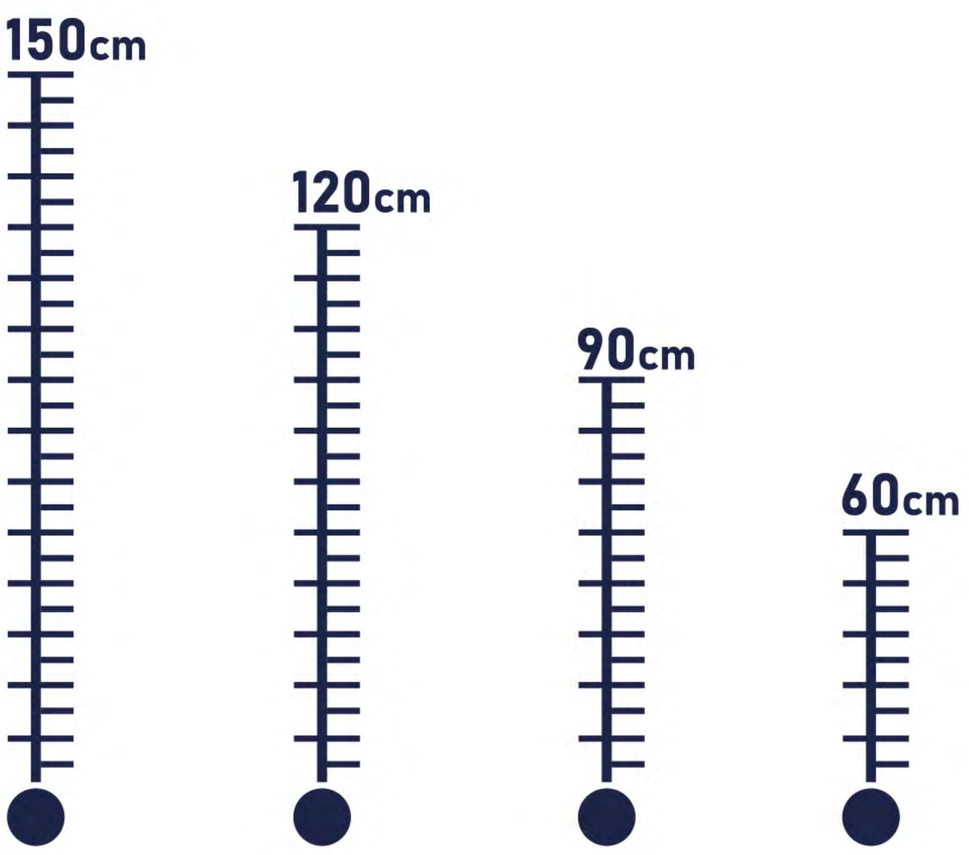

- Choose the set you want
  You can also choose the round pool in different variants and sets.
  Different lengths and heights, liner coating, set options and liner colors.



+ 169



+ 145

Maldiv Steel Pool 150





Oval Steel Pool

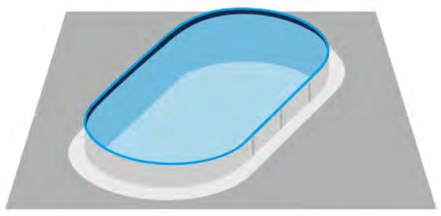

- Above ground
- 150 cm deep



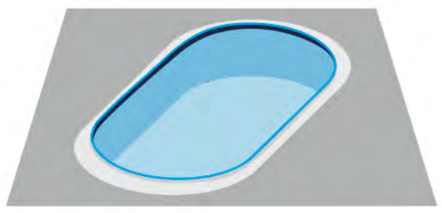

- Inground
- 150 cm Deep



- Above ground & Inground
- Steel profile screw assembly
- Galvanized steel panel
- Wall thickness 0.8 mm

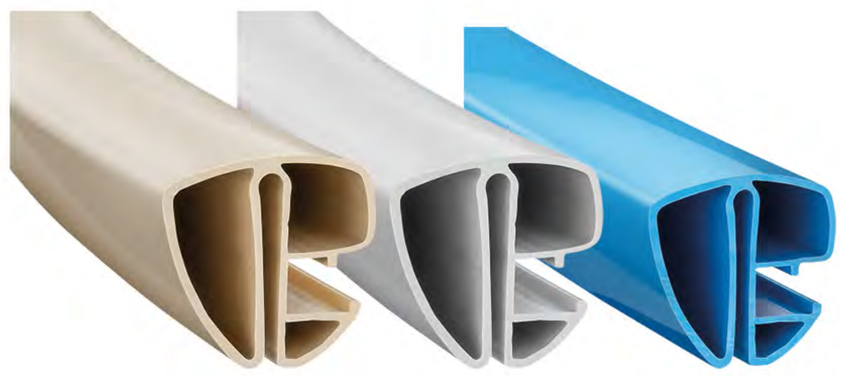



	CODE	DIMENSION	VOLUME	PVC RAIL	0,7mm LINER	H PROFILE LOCK	SKIMMER NOZUL SET	GEOTEXTILE	FILTRATION SET	LADDER	PUMP	SOLARFOLI
Beginer Set	M1001	Ø 300X150	V. 45	✓	✓	✓	–	–	–	–	–	–
	M1002	Ø 350X150	V. 45	✓	✓	✓	–	–	–	–	–	–
	M1003	Ø 400X150	V. 45	✓	✓	✓	–	–	–	–	–	–
	M1004	Ø 450X150	V. 45	✓	✓	✓	–	–	–	–	–	–
	M1005	Ø 500X150	V. 45	✓	✓	✓	–	–	–	–	–	–
	M1006	Ø 600X150	V. 45	✓	✓	✓	–	–	–	–	–	–
Advanced Set	M1001	Ø 300X150	V. 45	✓	✓	✓	✓	✓	✓	–	–	–
	M1002	Ø 350X150	V. 45	✓	✓	✓	✓	✓	✓	–	–	–
	M1003	Ø 400X150	V. 45	✓	✓	✓	✓	✓	✓	–	–	–
	M1004	Ø 450X150	V. 45	✓	✓	✓	✓	✓	✓	–	–	–
	M1005	Ø 500X150	V. 45	✓	✓	✓	✓	✓	✓	–	–	–
	M1006	Ø 600X150	V. 45	✓	✓	✓	✓	✓	✓	–	–	–
Professional Set	M1001	Ø 300X150	V. 45	✓	✓	✓	✓	✓	✓	✓	✓	–
	M1002	Ø 350X150	V. 45	✓	✓	✓	✓	✓	✓	✓	✓	–
	M1003	Ø 400X150	V. 45	✓	✓	✓	✓	✓	✓	✓	✓	–
	M1004	Ø 450X150	V. 45	✓	✓	✓	✓	✓	✓	✓	✓	–
	M1005	Ø 500X150	V. 45	✓	✓	✓	✓	✓	✓	✓	✓	–
	M1006	Ø 600X150	V. 45	✓	✓	✓	✓	✓	✓	✓	✓	–

MALDIV

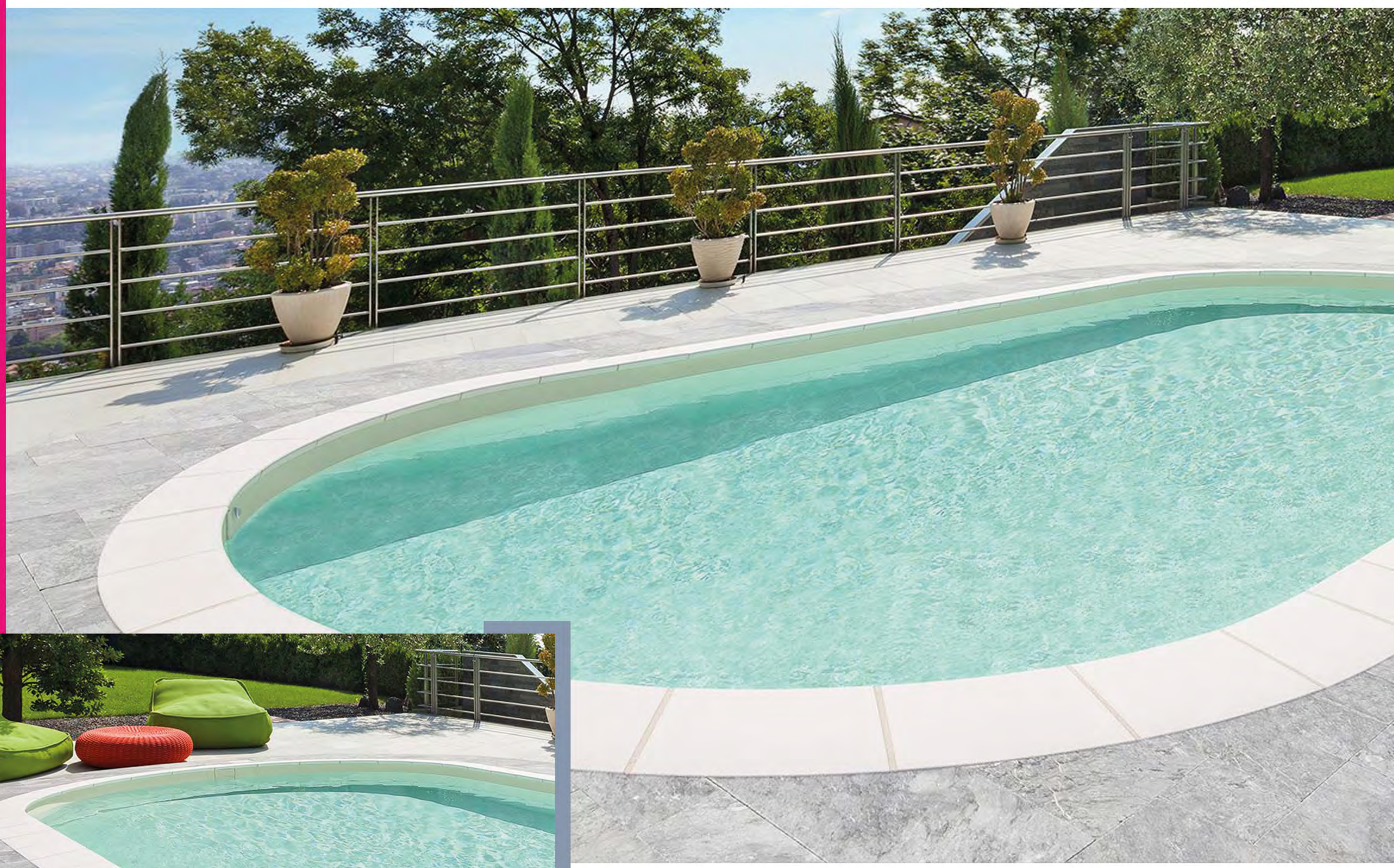

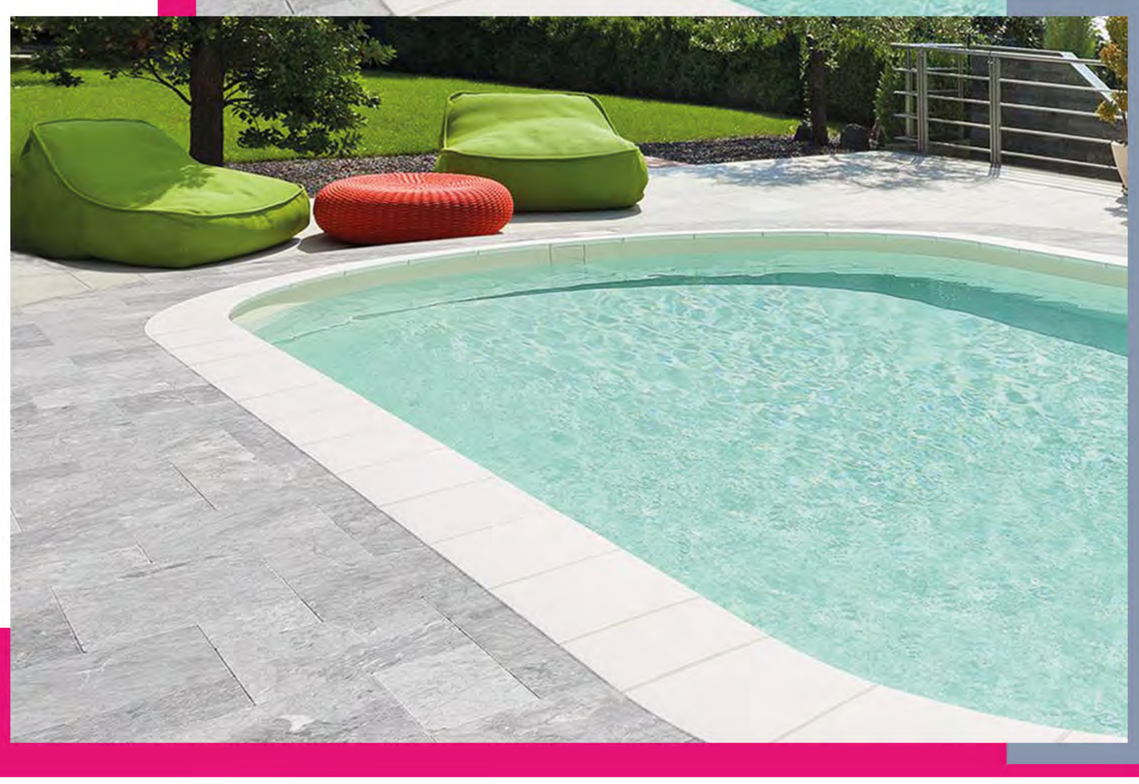

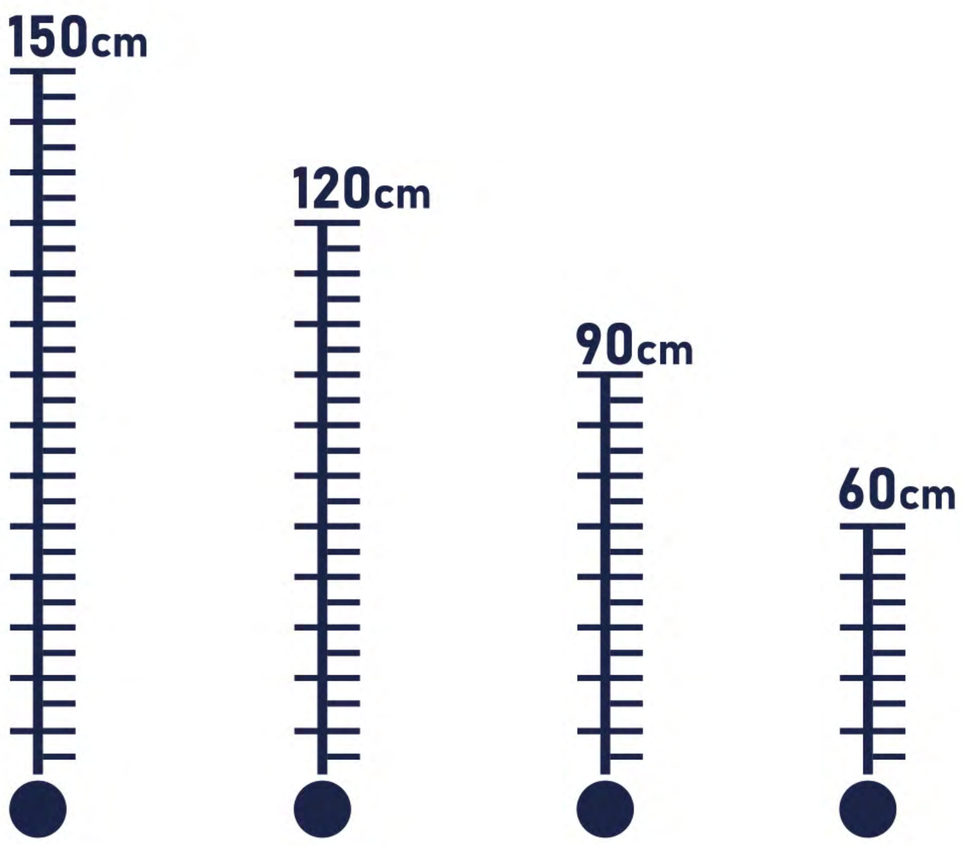

- Choose the set you want
  You can also choose the round pool in different variants and sets.
  Different lengths and heights, liner coating, set options and liner colors.





Maldiv Steel Pool 120





Oval Steel Pool

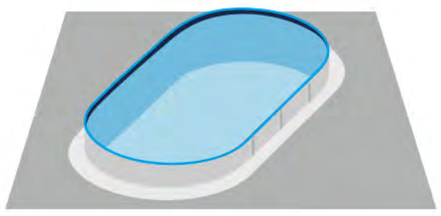

- Above ground
- 120 cm deep



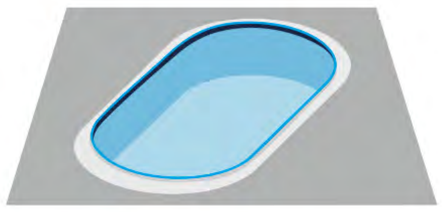

- Inground
- 120 cm Deep



- Above ground & Inground
- Steel profile screw assembly
- Galvanized steel panel
- Wall thickness 0.8 mm

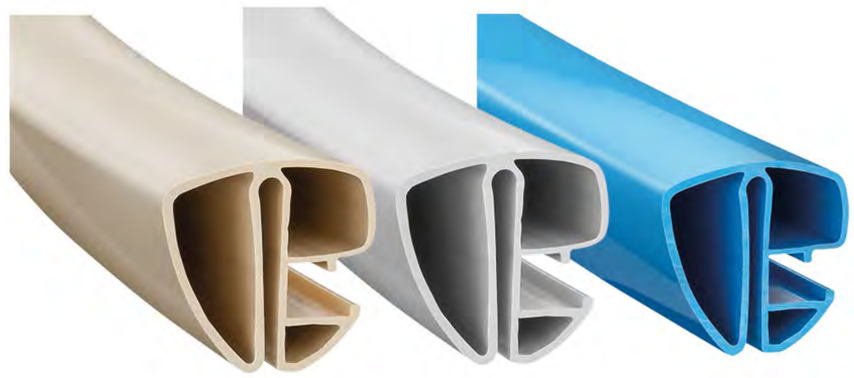



	CODE	DIMENSION	VOLUME	PVC RAIL	0,7mm LINER	H PROFILE LOCK	SKIMMER NOZUL SET	GEOTEXTILE	FILTRATION SET	LADDER	PUMP	SOLARFOLI
Beginer Set	M1001	Ø 300X120	V. 45	✓	✓	✓	–	–	–	–	–	–
	M1002	Ø 350X120	V. 45	✓	✓	✓	–	–	–	–	–	–
	M1003	Ø 400X120	V. 45	✓	✓	✓	–	–	–	–	–	–
	M1004	Ø 450X120	V. 45	✓	✓	✓	–	–	–	–	–	–
	M1005	Ø 500X120	V. 45	✓	✓	✓	–	–	–	–	–	–
	M1006	Ø 600X120	V. 45	✓	✓	✓	–	–	–	–	–	–
Advanced Set	M1001	Ø 300X120	V. 45	✓	✓	✓	✓	✓	✓	–	–	–
	M1002	Ø 350X120	V. 45	✓	✓	✓	✓	✓	✓	–	–	–
	M1003	Ø 400X120	V. 45	✓	✓	✓	✓	✓	✓	–	–	–
	M1004	Ø 450X120	V. 45	✓	✓	✓	✓	✓	✓	–	–	–
	M1005	Ø 500X120	V. 45	✓	✓	✓	✓	✓	✓	–	–	–
	M1006	Ø 600X120	V. 45	✓	✓	✓	✓	✓	✓	–	–	–
Professional Set	M1001	Ø 300X120	V. 45	✓	✓	✓	✓	✓	✓	✓	✓	–
	M1002	Ø 350X120	V. 45	✓	✓	✓	✓	✓	✓	✓	✓	–
	M1003	Ø 400X120	V. 45	✓	✓	✓	✓	✓	✓	✓	✓	–
	M1004	Ø 450X120	V. 45	✓	✓	✓	✓	✓	✓	✓	✓	–
	M1005	Ø 500X120	V. 45	✓	✓	✓	✓	✓	✓	✓	✓	–
	M1006	Ø 600X120	V. 45	✓	✓	✓	✓	✓	✓	✓	✓	–

1 The pool area suitable for the project is determined and the excavation process is started according to the elevation level.



2 After reaching the appropriate depth, ground leveling is done.



3 A flat concrete suitable for the project is poured and after a day it becomes ready for assembly.



4 The body is completely formed in about 2 days and 30 cm heel concrete is placed behind the cross legs for support purposes.



5 Liner assembly is completed. Required test and final water filling process is started by making checks.



6 Environmental filling is done with the water filling process. Sand should be used in the environmental filling.



7 After the fillings are completed, the environmental concrete preparation for the landscaping is done.



8 Environmental concrete is poured according to the type of material to be applied around the pool.









MALDIV

MALDIV STEEL PANEL

Galvanized, steel panel wall

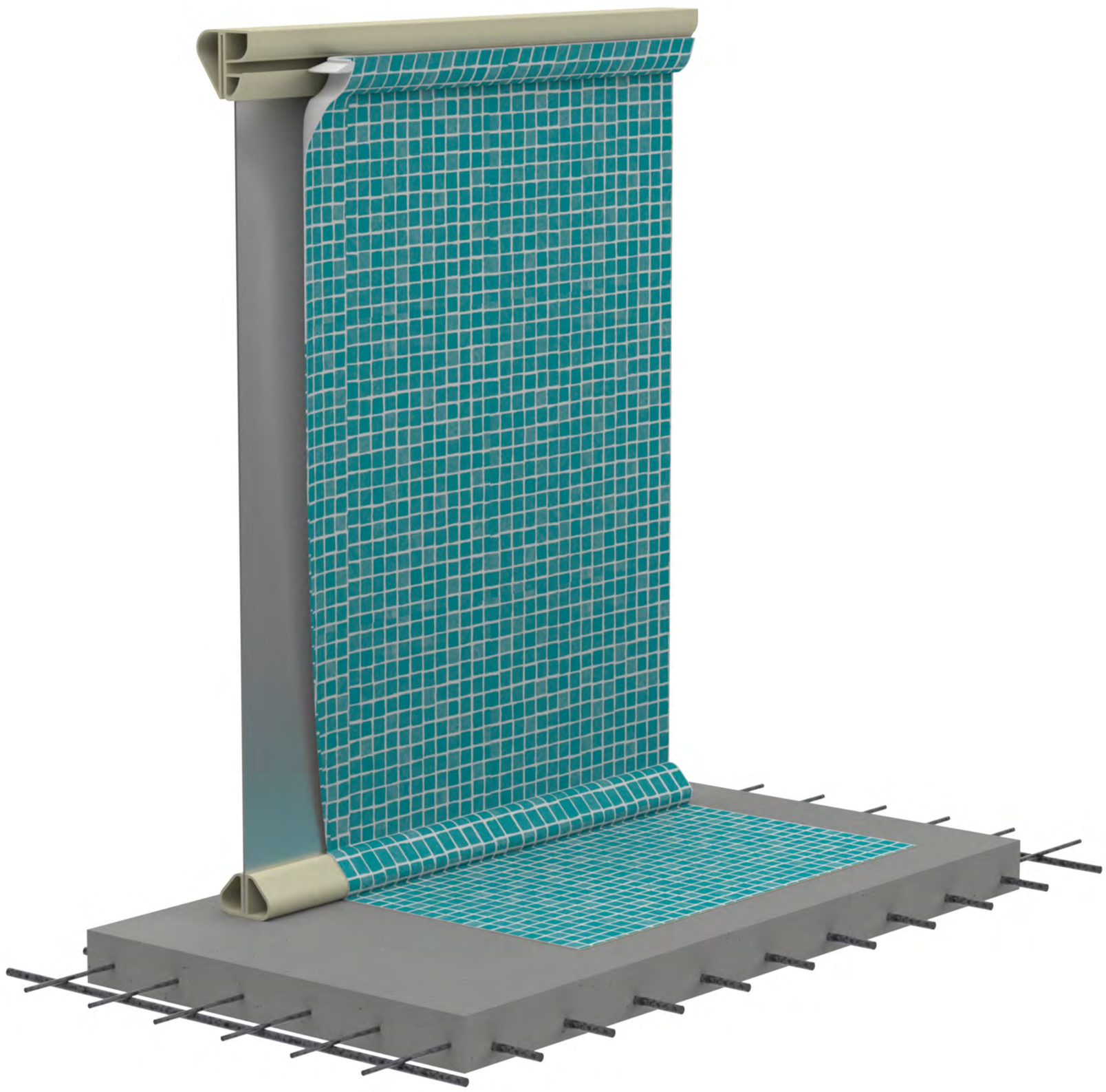

0.8 mm thick steel pool side walls made of special alloy steel and are subjected to different processes.
Pool walls are resistant to all kinds of heat, humidity, water pressure, corrosion and other conditions and
are much stronger than concrete.

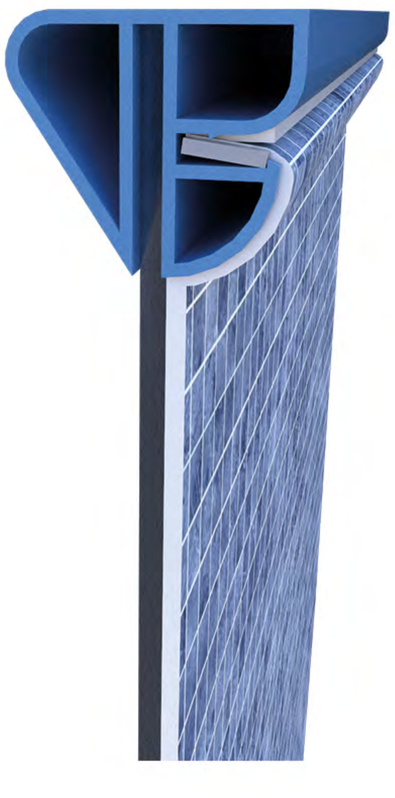

Hanger Profile

Special design of upper rail which
enables easy to fix / easy to replace
of the liner

■ PVC Rail - Different Variants

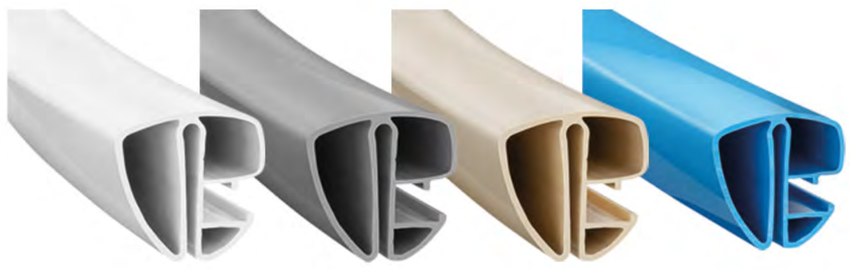

H Lock

With H lock profile system
to the floor movements of the pool
provides flexibility.

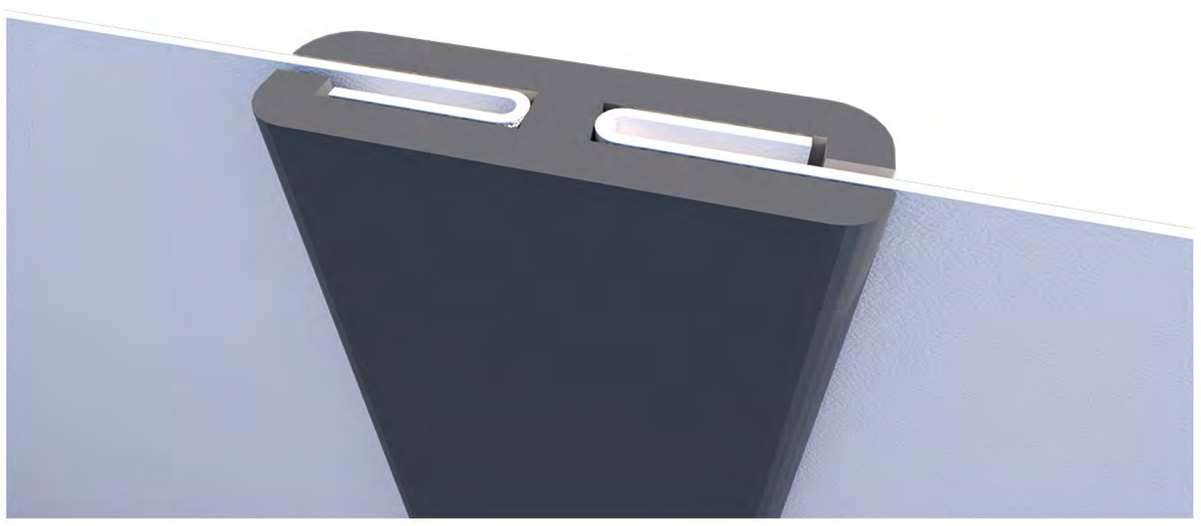

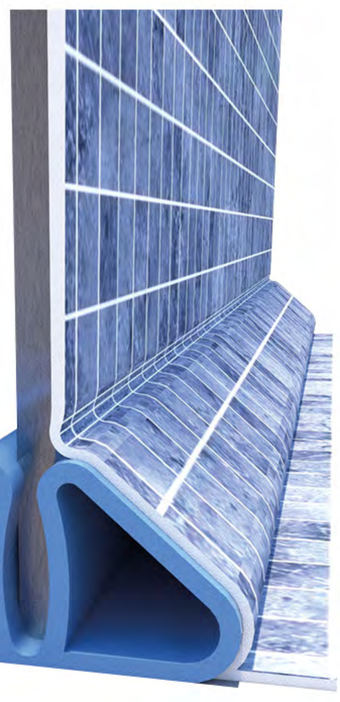

Bottom Rail

Corner breaker not used in PVC and sheet
metal bottom rails profiles on the liner inner
wall as a result of water pressure
form the deformation zones.
Corner breaker profiles used with superior
BRT technology It turns the base corners,
which are 90°, to 45°.
This liner prevents deformation on
the inner wall.

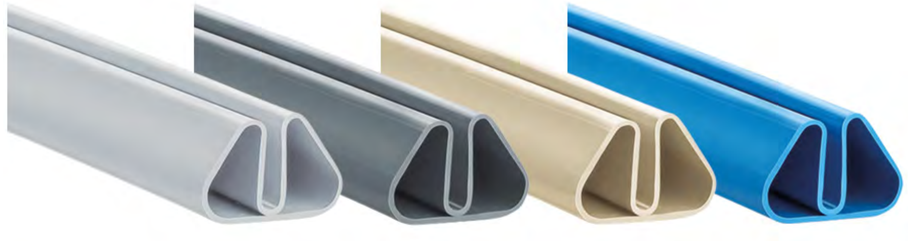

■ Easy Change PVC Bottom Rail - Different Variants

PVC bottom rails are available in different color options.
Color blue, beige, white, gray

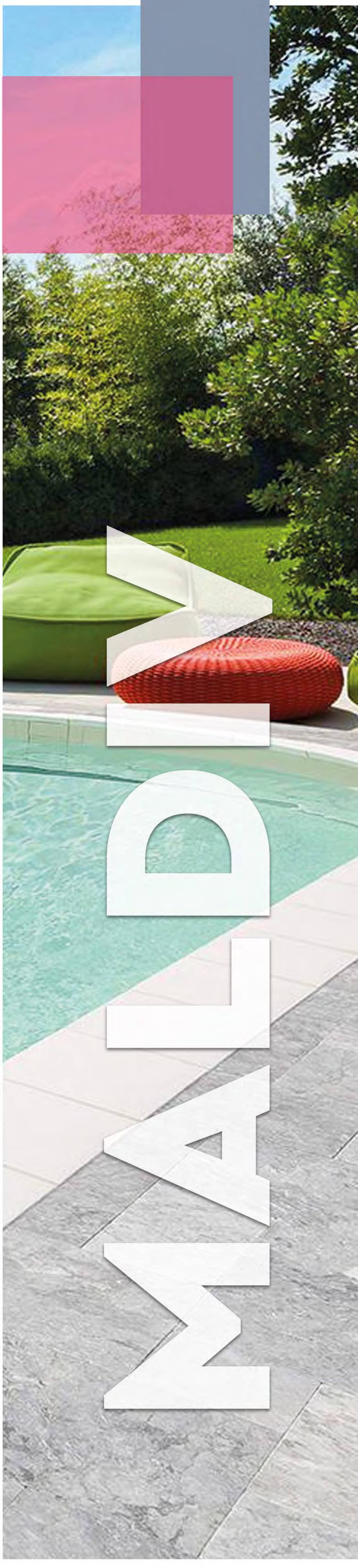

BORA STEEL POOL

Bora pool



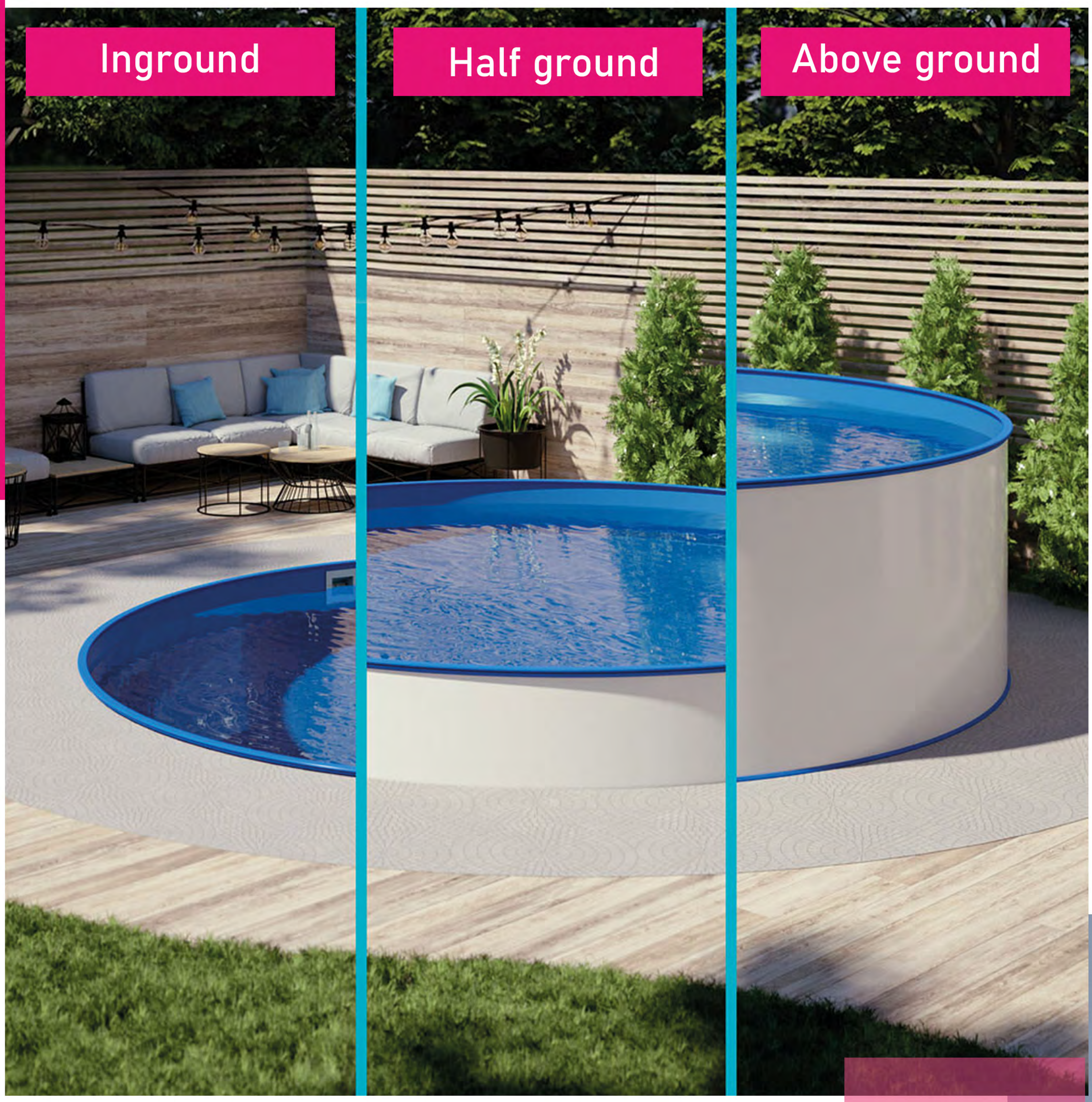

IMPORTANT NOTE:
IMPORTANT NOTE:
In addition to the world standard 1.5m height in pools, production can be made in different heights such as 120cm, 90cm and 60cm, which are needed for different reasons. Pools deeper than 1.5 m are considered risky as per the standards, and it is obligatory to have a lifeguard in the public areas.

Bora steel pool



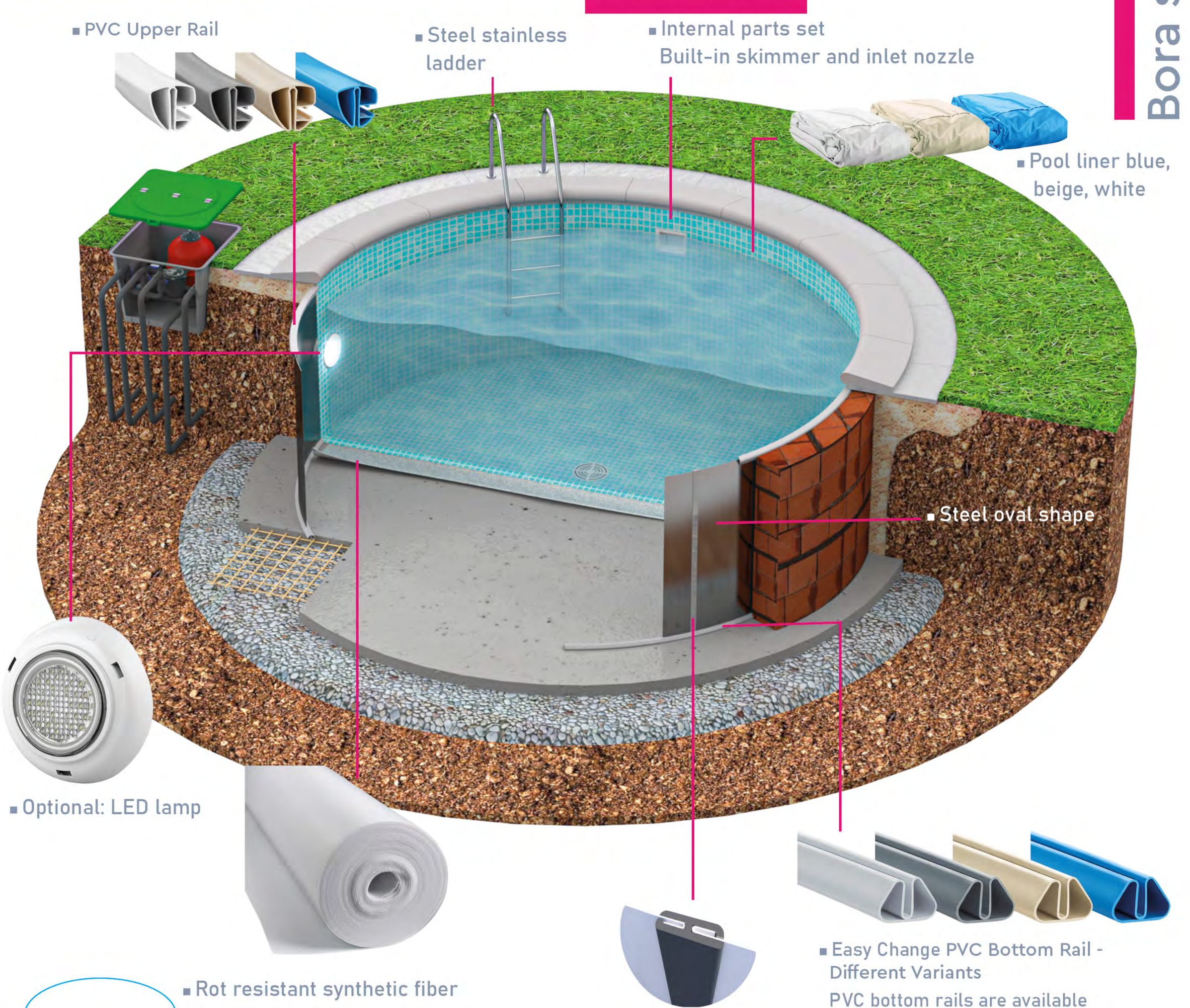

■ Optional: LED lamp

■ Aluminum profile
H-lock holds sheet steel together

■ Easy Change PVC Bottom Rail - Different Variants

PVC bottom rails are available in different color options.
Color : blue, beige, white, gray

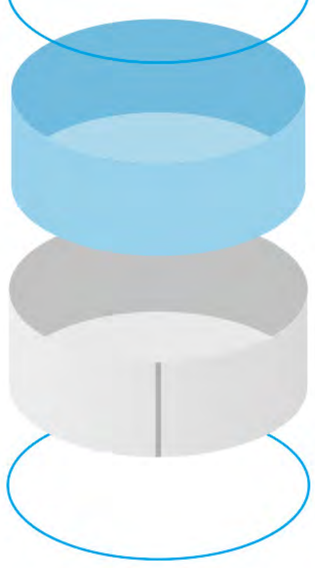

■ Rot resistant synthetic fiber
Suitable for the size of the pool with a margin of about 6 mm
White color

BORA



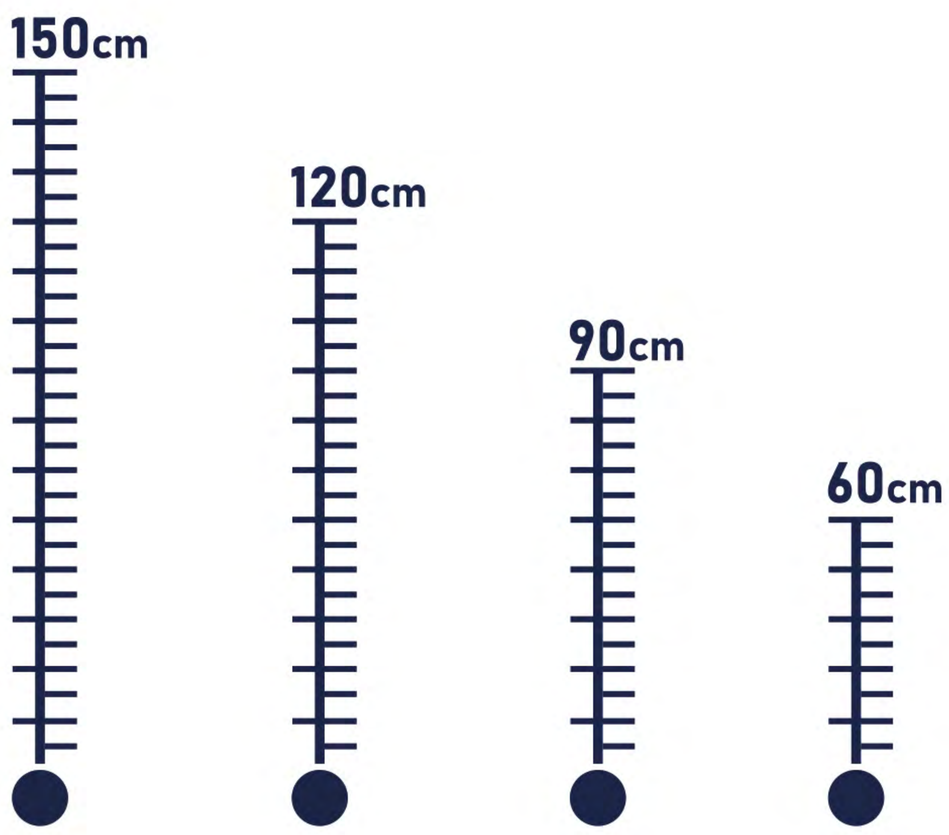

- Choose the set you want
  You can also choose the round pool in different variants and sets.
  Different lengths and heights, liner coating, set options and liner colors.



169



145

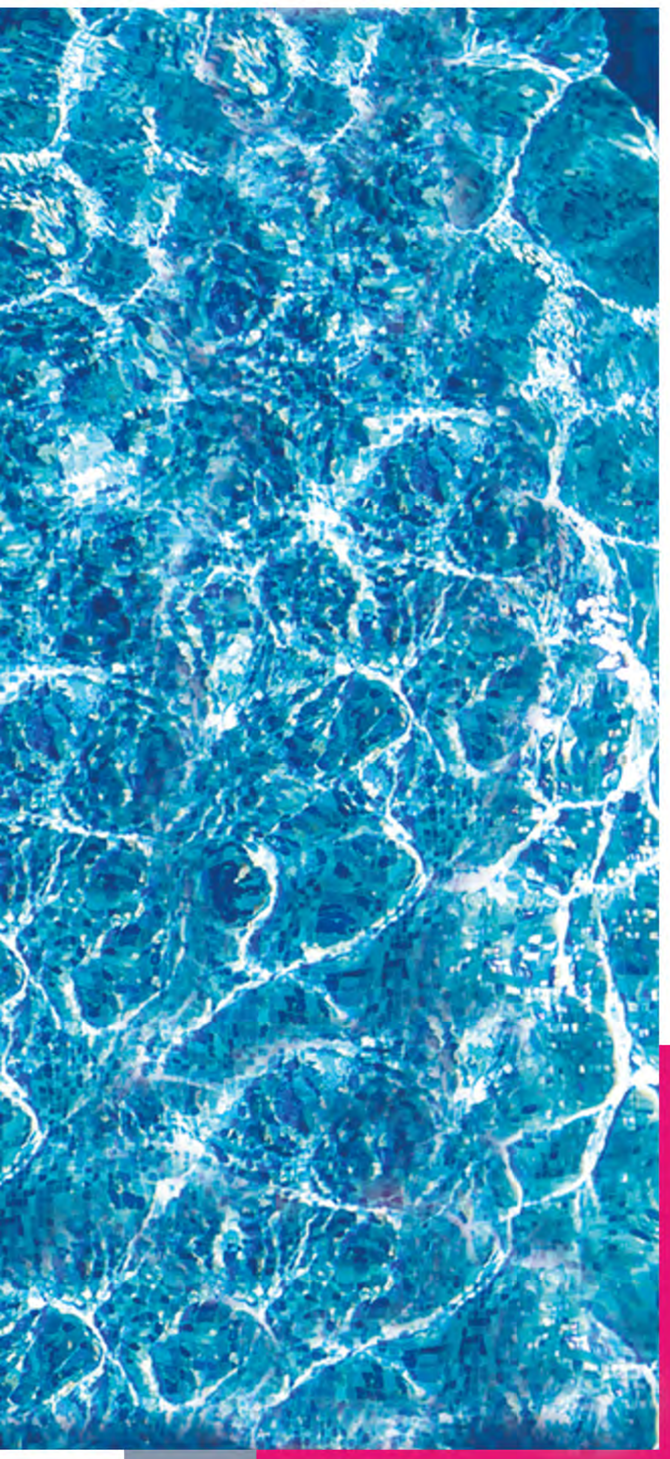



Round Steel Pool



- Above ground
- 150 cm deep



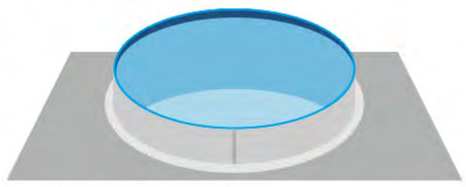

- Half ground
- 150 cm deep



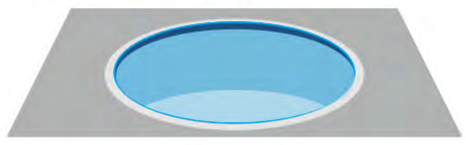

- Inground
- 150 cm Deep



- Above ground & Half ground & Inground
- Steel profile screw assembly
- Galvanized steel panel
- Wall thickness 0.8 mm

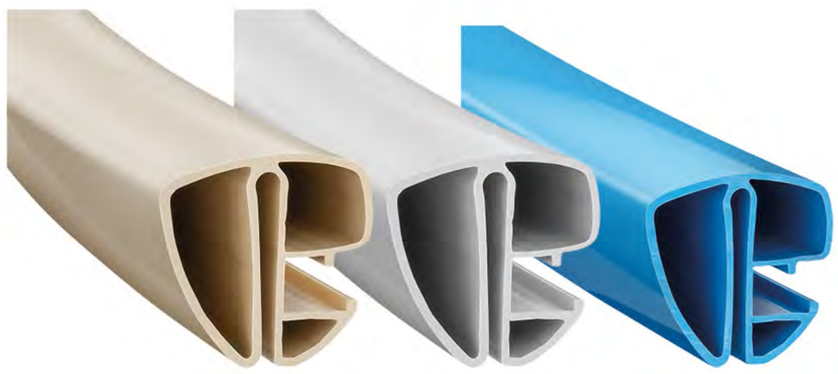

Bora Steel Pool 150

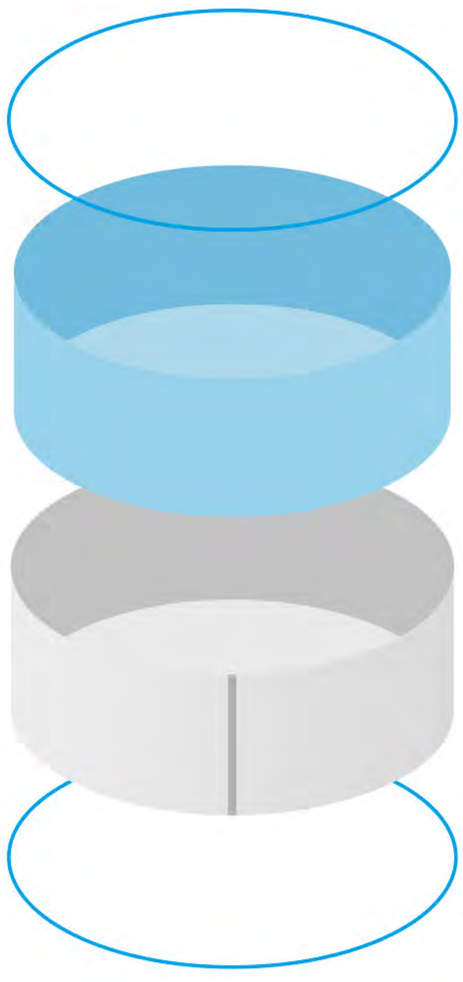

	CODE	DIMENSION	VOLUME	PVC RAIL	0,7mm LINER	H PROFILE LOCK	SKIMMER NOZUL SET	GEOTEXTILE	FILTRATION SET	LADDER	PUMP	SOLARFOLI
Beginer Set	B1001	Ø 300X150	V. 45	✓	✓	✓	–	–	–	–	–	–
	B1002	Ø 350X150	V. 45	✓	✓	✓	–	–	–	–	–	–
	B1003	Ø 400X150	V. 45	✓	✓	✓	–	–	–	–	–	–
	B1004	Ø 450X150	V. 45	✓	✓	✓	–	–	–	–	–	–
	B1005	Ø 500X150	V. 45	✓	✓	✓	–	–	–	–	–	–
	B1006	Ø 600X150	V. 45	✓	✓	✓	–	–	–	–	–	–
Advanced Set	B1001	Ø 300X150	V. 45	✓	✓	✓	✓	✓	✓	–	–	–
	B1002	Ø 350X150	V. 45	✓	✓	✓	✓	✓	✓	–	–	–
	B1003	Ø 400X150	V. 45	✓	✓	✓	✓	✓	✓	–	–	–
	B1004	Ø 450X150	V. 45	✓	✓	✓	✓	✓	✓	–	–	–
	B1005	Ø 500X150	V. 45	✓	✓	✓	✓	✓	✓	–	–	–
	B1006	Ø 600X150	V. 45	✓	✓	✓	✓	✓	✓	–	–	–
Professional Set	B1001	Ø 300X150	V. 45	✓	✓	✓	✓	✓	✓	✓	✓	–
	B1002	Ø 350X150	V. 45	✓	✓	✓	✓	✓	✓	✓	✓	–
	B1003	Ø 400X150	V. 45	✓	✓	✓	✓	✓	✓	✓	✓	–
	B1004	Ø 450X150	V. 45	✓	✓	✓	✓	✓	✓	✓	✓	–
	B1005	Ø 500X150	V. 45	✓	✓	✓	✓	✓	✓	✓	✓	–
	B1006	Ø 600X150	V. 45	✓	✓	✓	✓	✓	✓	✓	✓	–

BORA



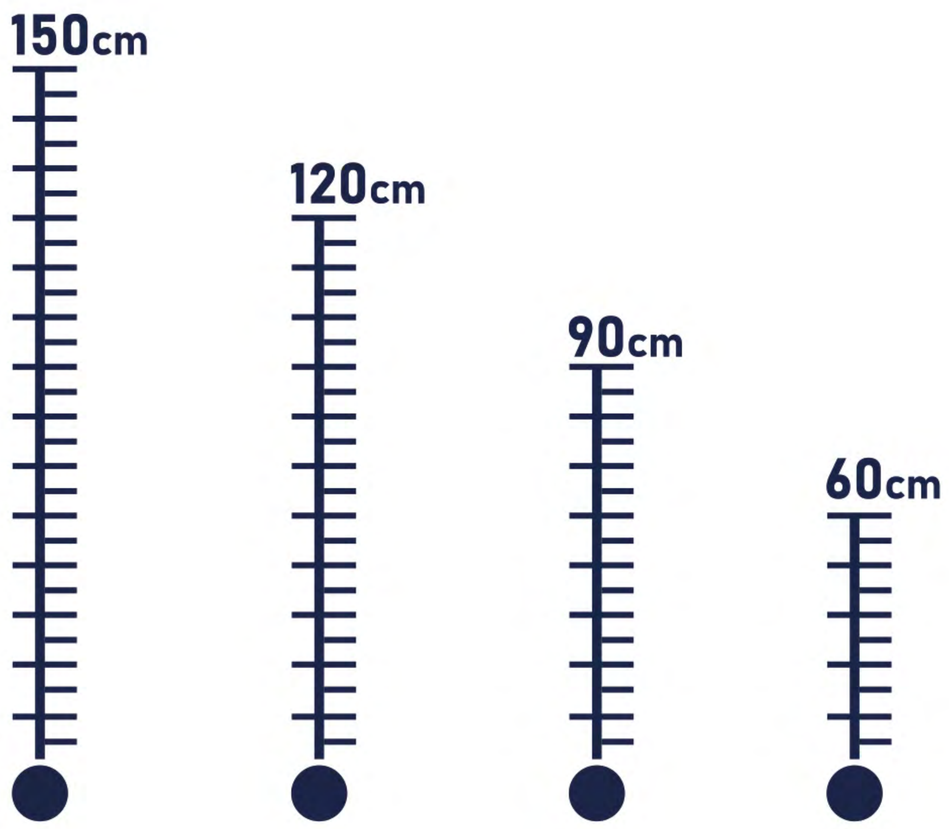

- Choose the set you want
  You can also choose the round pool in different variants and sets.
  Different lengths and heights, liner coating, set options and liner colors.









Round Steel Pool



- Above ground
- 120 cm deep

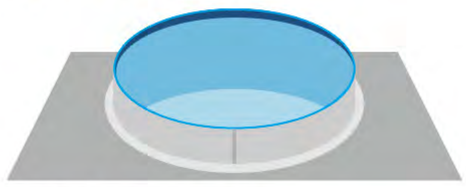

- Half ground
- 120 cm deep

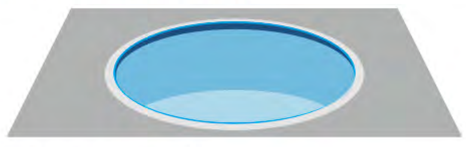

- Inground
- 120 cm deep



- Above ground & Half ground & Inground
- Steel profile screw assembly



- Galvanized steel panel
- Wall thickness 0.8 mm



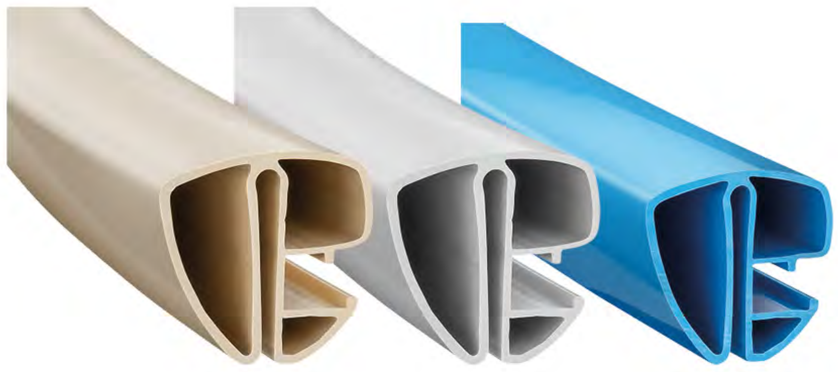

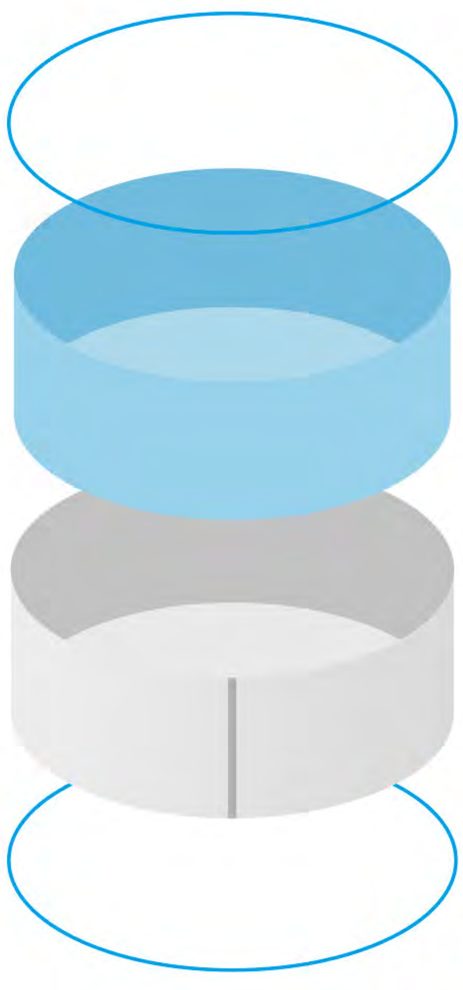

	CODE	DIMENSION	VOLUME	PVC RAIL	0,7mm LINER	H PROFILE LOCK	SKIMMER NOZUL SET	GEOTEXTILE	FILTRATION SET	LADDER	PUMP	SOLARFOLI
Beginer Set	B1001	Ø 300X120	V. 45	✓	✓	✓	–	–	–	–	–	–
	B1002	Ø 350X120	V. 45	✓	✓	✓	–	–	–	–	–	–
	B1003	Ø 400X120	V. 45	✓	✓	✓	–	–	–	–	–	–
	B1004	Ø 450X120	V. 45	✓	✓	✓	–	–	–	–	–	–
	B1005	Ø 500X120	V. 45	✓	✓	✓	–	–	–	–	–	–
	B1006	Ø 600X120	V. 45	✓	✓	✓	–	–	–	–	–	–
Advanced Set	B1001	Ø 300X120	V. 45	✓	✓	✓	✓	✓	✓	–	–	–
	B1002	Ø 350X120	V. 45	✓	✓	✓	✓	✓	✓	–	–	–
	B1003	Ø 400X120	V. 45	✓	✓	✓	✓	✓	✓	–	–	–
	B1004	Ø 450X120	V. 45	✓	✓	✓	✓	✓	✓	–	–	–
	B1005	Ø 500X120	V. 45	✓	✓	✓	✓	✓	✓	–	–	–
	B1006	Ø 600X120	V. 45	✓	✓	✓	✓	✓	✓	–	–	–
Professional Set	B1001	Ø 300X120	V. 45	✓	✓	✓	✓	✓	✓	✓	✓	–
	B1002	Ø 350X120	V. 45	✓	✓	✓	✓	✓	✓	✓	✓	–
	B1003	Ø 400X120	V. 45	✓	✓	✓	✓	✓	✓	✓	✓	–
	B1004	Ø 450X120	V. 45	✓	✓	✓	✓	✓	✓	✓	✓	–
	B1005	Ø 500X120	V. 45	✓	✓	✓	✓	✓	✓	✓	✓	–
	B1006	Ø 600X120	V. 45	✓	✓	✓	✓	✓	✓	✓	✓	–

Bora Steel Pool 120

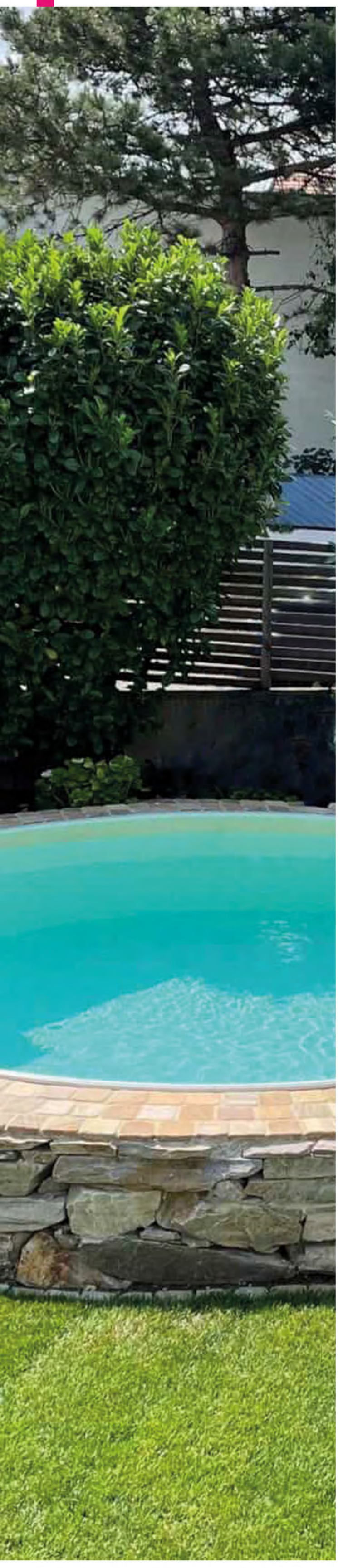

BORA STEEL PANEL

Galvanized, steel panel wall

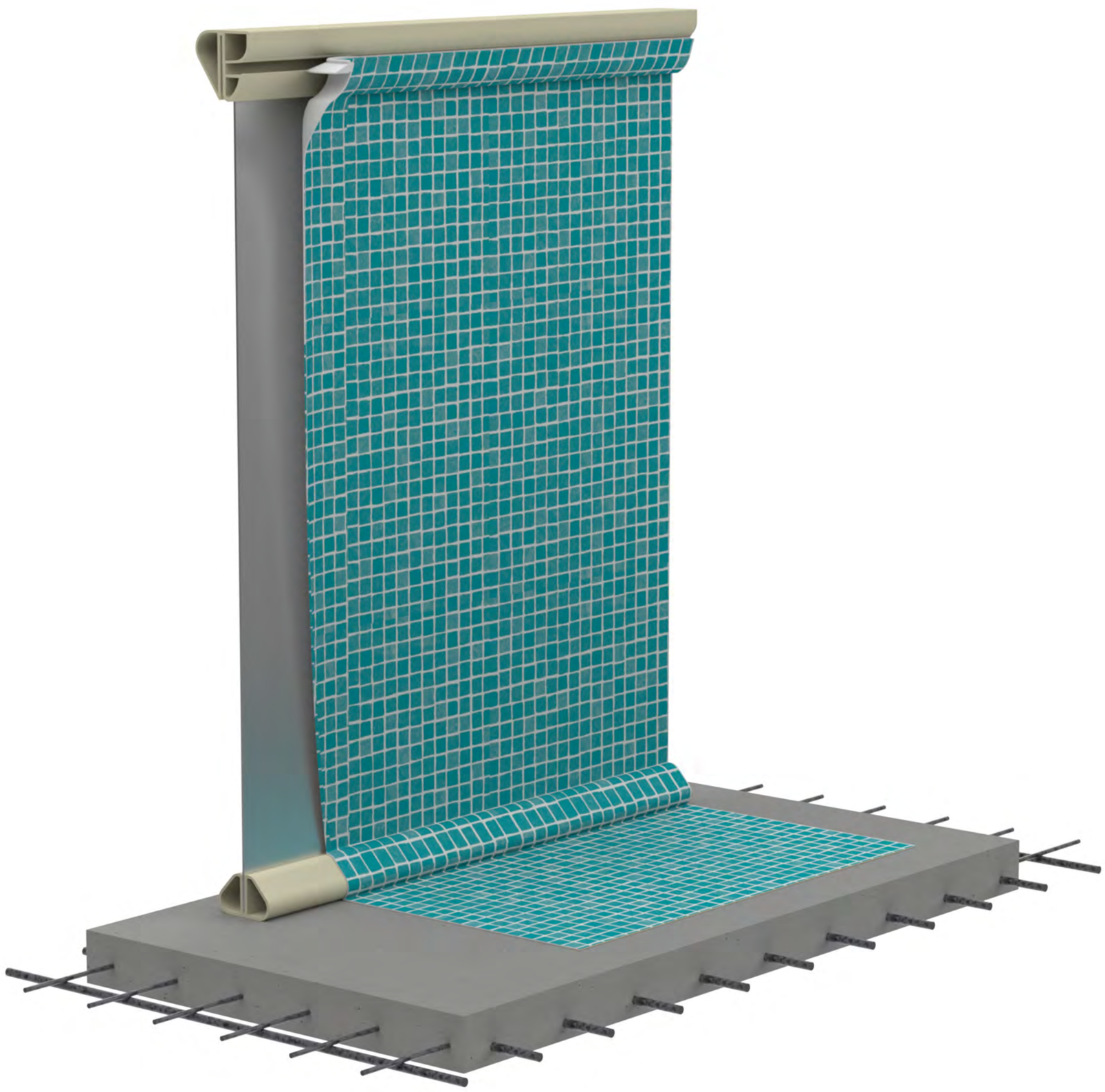

0.8 mm thick steel pool side walls made of special alloy steel and are subjected to different processes.
Pool walls are resistant to all kinds of heat, humidity, water pressure, corrosion and other conditions and
are much stronger than concrete.

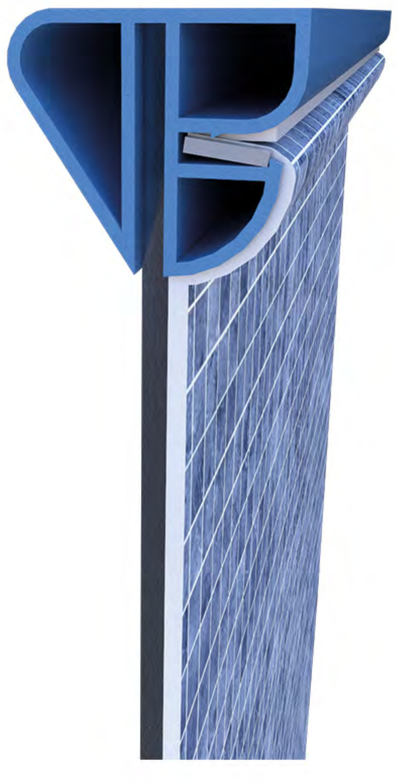

Hanger Profile

Special design of upper rail which
enables easy to fix / easy to replace
of the liner

■ PVC Rail - Different Variants

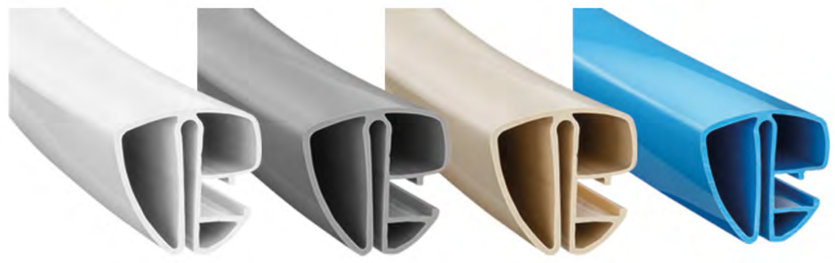

H Lock

With H lock profile system
to the floor movements of the pool
provides flexibility.

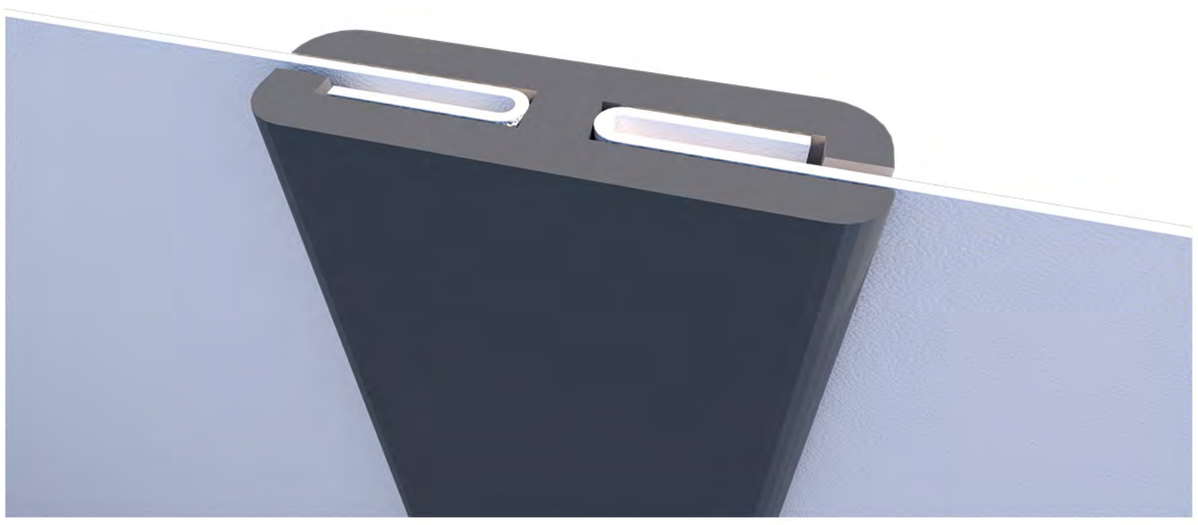

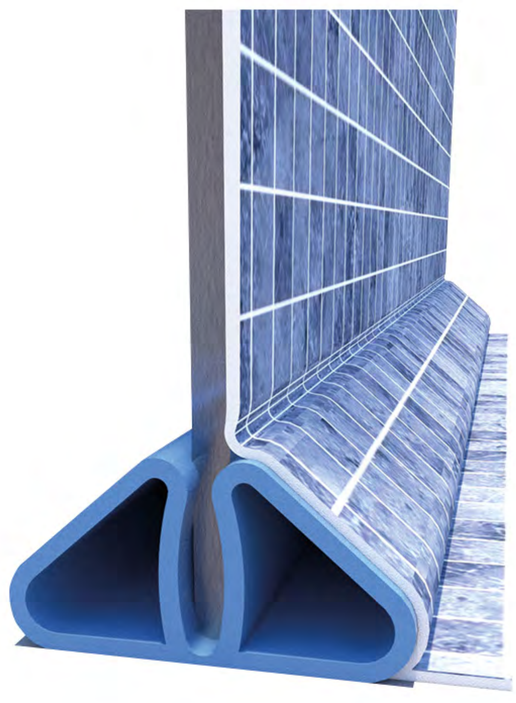

Bottom Rail

Corner breaker not used in PVC and sheet
metal bottom rails profiles on the liner inner
wall as a result of water pressure
form the deformation zones.
Corner breaker profiles used with superior
BRT technology It turns the base corners,
which are 90°, to 45°.
This liner prevents deformation on
the inner wall.

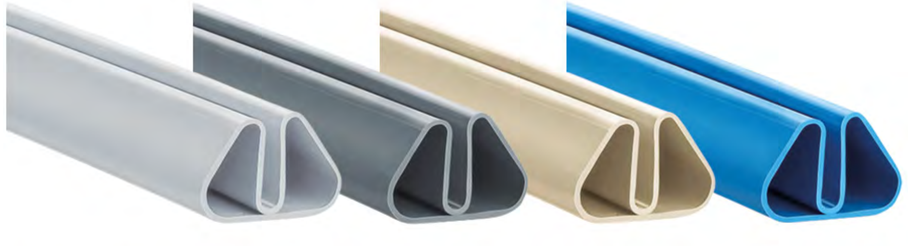

■ Easy Change PVC Bottom Rail - Different Variants

PVC bottom rails are available in different color options.
Color blue, beige, white, gray



RENOLIT LINER COLOR

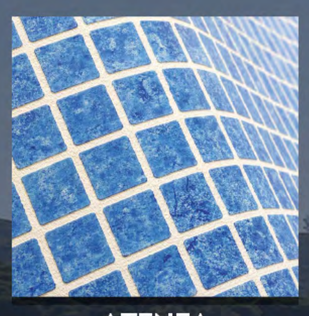
ATENEA

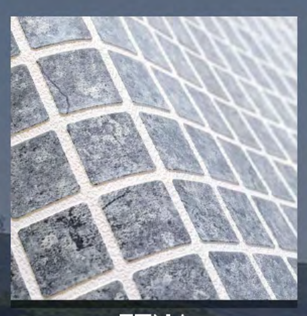
ETNA

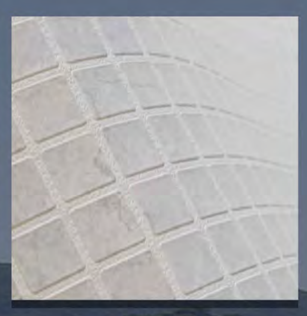
SELENE

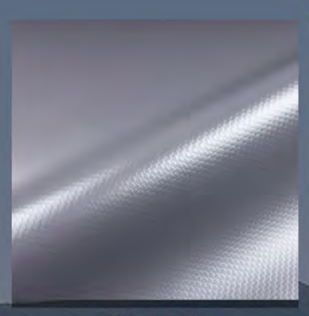
BLACK

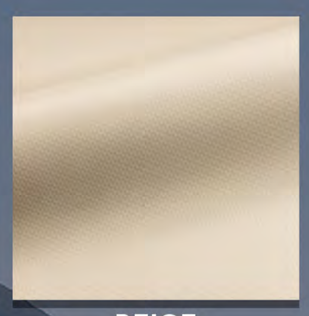
BEIGE

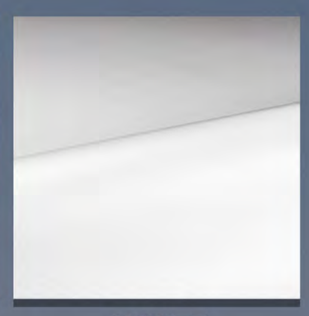
WHITE

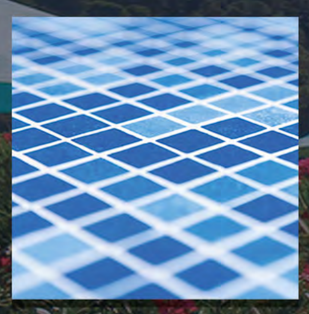
PERSIA BLUE


PERSIA SAND


CARRARA


LIGHT BLUE


ADRIATIC BLUE


TURQUOISE


MARBLE

3D
TISSUE FOILS
BRT2021

SURFACE RELIEF

BRT's surface embossed pool liner,
to add a natural air to the pool. smooth surfaces
professionally rendered in three-dimensional textures
converted.
In addition to the excellent, multi-layered structure
feel the quality: three-dimensional
Surface structure, fine material, high flexibility
and easier processing of difficult contours.

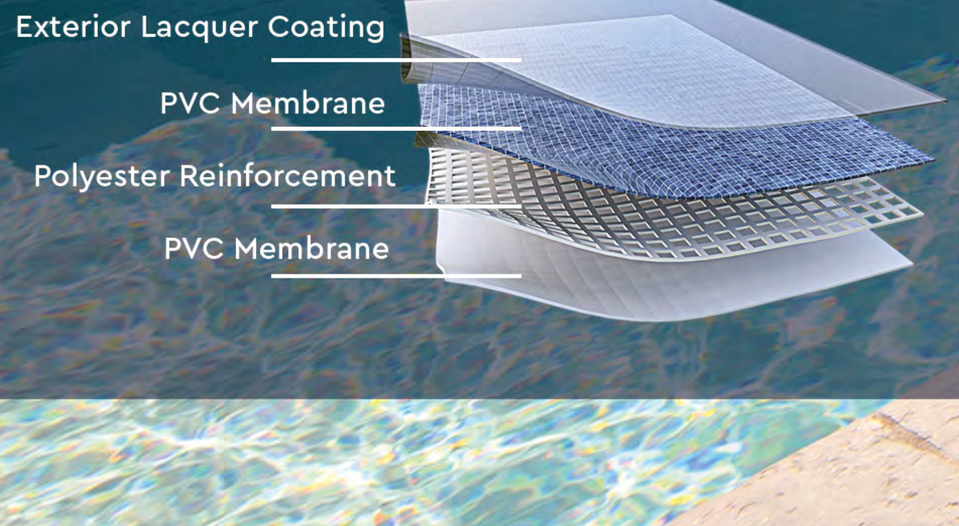

Solid Colors Anti sleep
TISSUE FOILS
BRT2020

The LINER membrane consists of two high-quality layers.
Also PVC film coated with polyester fabric
is reinforced. It is multi-layered and qualitative
Quality construction makes your slide work too
then it remains waterproof if there is a crack in its structure
swimming pool is created.
In addition, PF3000 with its bleach resistant formula
lowest fading values in the industry and on the stands
for a special longevity.



2023
NEW
SEASON

From the world market leader

SATISFACTION
THE QUALITY CHECK APPROVED
GUARANTEED

RENOLIT
Rely on it.

RENOLIT

Rely on it.

If you want an attractive pool that will give you no problems, RENOLIT ALKORPLAN reinforced liner is the perfect product to achieve this.

We offer you the pool of your dreams



With RENOLIT ALKORPLAN this won't happen ...!

RENOLIT ALKORPLAN makes your dreams come true.
Our pool liners convert even the most modest pool into the centre of attraction in your garden, regardless of its size or its location.

RENOLIT ALKORPLAN and its many options help you create a unique and exclusive setting for your enjoyment.

RENOLIT ALKORPLAN 2000

If you want an attractive pool that will give you no problems, RENOLIT ALKORPLAN reinforced liner is the perfect product to achieve this.

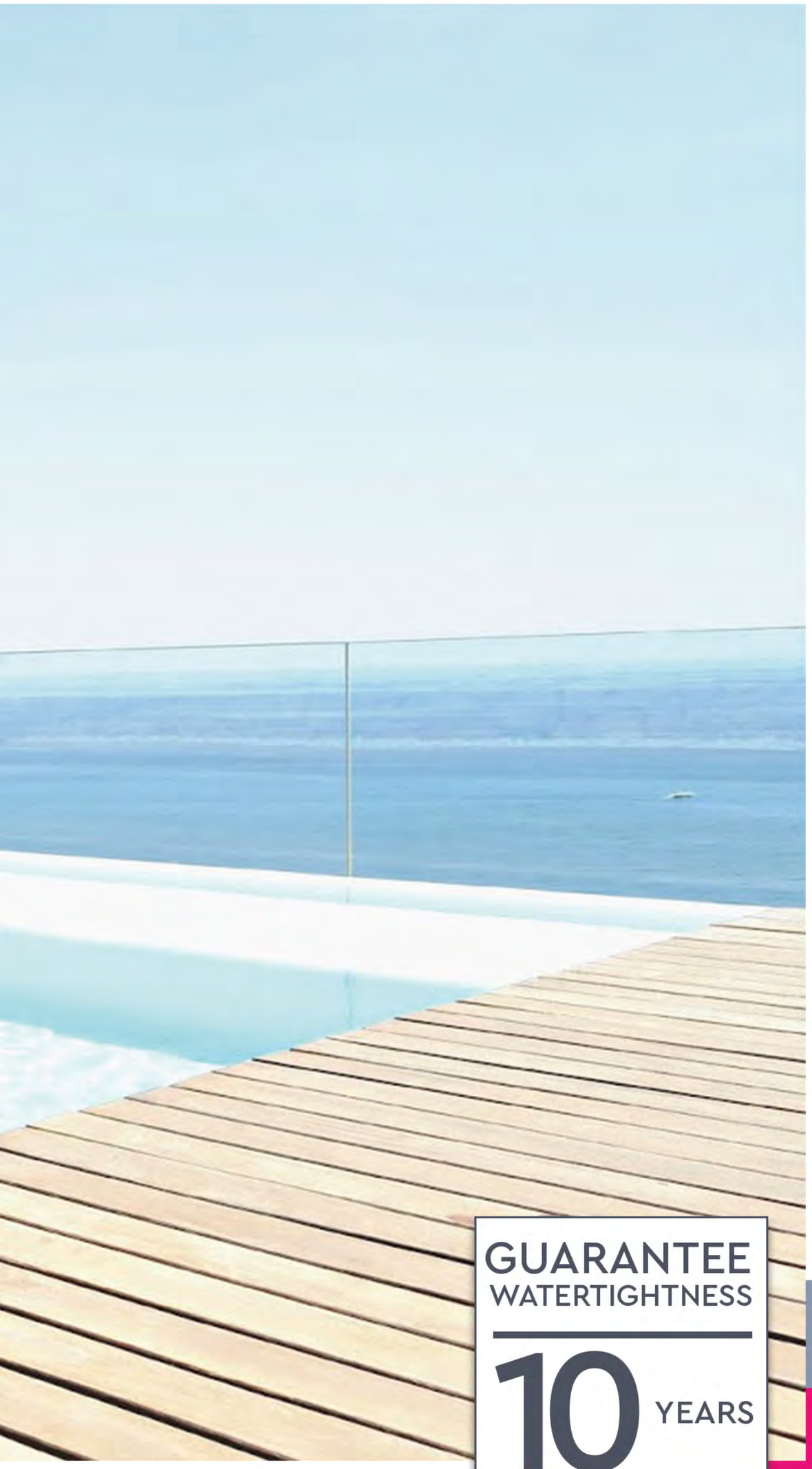

GUARANTEE WATERTIGHTNESS
10 YEARS



White	
1.65 m	35216202
2.05 m	35216201
1.65 m Non-Slip	81116701



Sand	
1.65 m	35216210
2.05 m	35216211
1.65 m Non-Slip	81116705

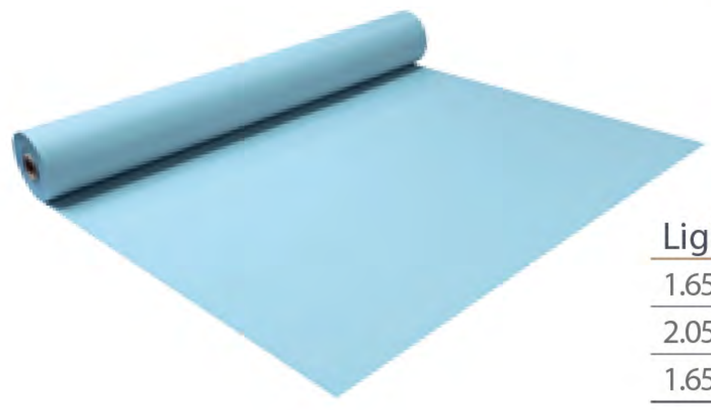

Light Blue	
1.65 m	35216205
2.05 m	35216208
1.65 m Non-Slip	81116704



Adriatic Blue	
1.65 m	35216203
2.05 m	35216207
1.65 m Non-Slip	81116702



Caribbean Green	
1.65 m	35216204
2.05 m	35216206
1.65 m Non-Slip	81116703



Light Grey	
1.65 m	35216236
2.05 m	35216233
1.65 m Non-Slip	81116706



Dark Grey	
1.65 m	35216327
2.05 m	35216326
1.65 m Non-Slip	81116707

No matter what your garden looks like RENOLIT ALKORPLAN allows you to create a unique, customised area just for you.

RENOLIT

Rely on it.

RENOLIT ALKORPLAN

Reinforced membranes are the most sought after in the world. Their attractive appearance, fair price, quick and easy installation and absolute watertightness, with a 10-year warranty, have made this film the most widely used swimming pool waterproofing system in the world.



Although the installation of RENOLIT ALKORPLAN is fast and easy, it should always be installed by qualified professionals to ensure a completely watertight finish.

RENOLIT ALKORPLAN 3000

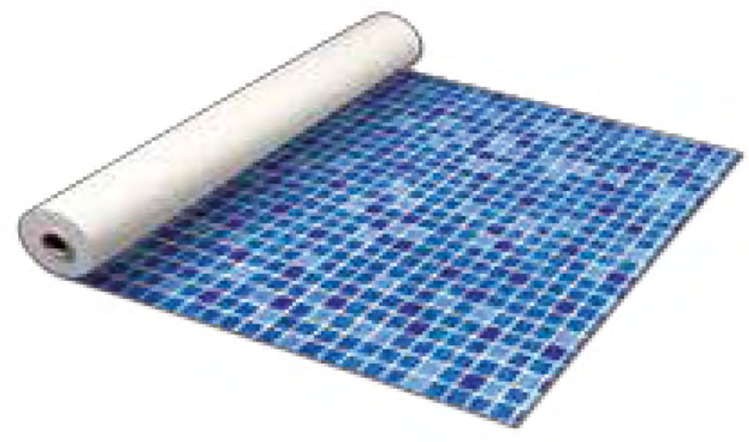

Persia Blue	
1.65 m	35417217



Persia Sand	
1.65 m	35417220

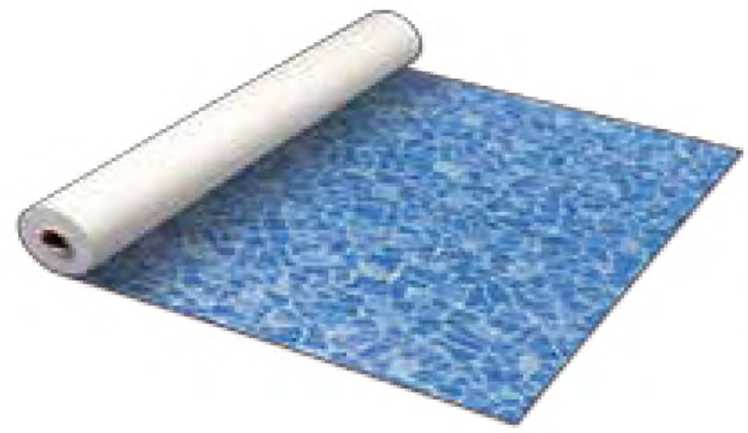

Carrara	
1.65 m	35417214



Marble	
1.65 m	35417213

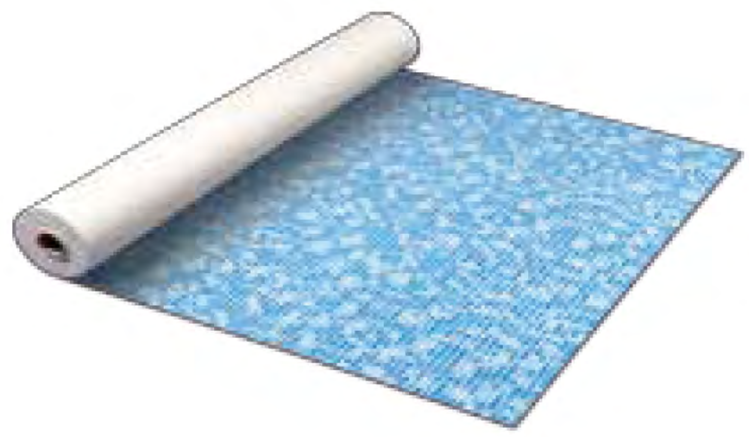

Bysance Blue	
1.65 m	35417209



Platinum	
1.65 m	35417402



GUARANTEE
WATERTIGHTNESS

10 YEARS

RENOLIT

Rely on it.

Advantages of the RENOLIT ALKORPLAN fleece:

Thanks to the fungicide treatment, the fleece inhibits the spread of
Microorganisms between the fabric-reinforced film and the
Pool body that due to moisture in the ground or from
organic residues and can affect the water quality.
Slight unevenness in the subfloor is optically concealed.
More comfort for the thanks to the more pleasant surface structure bathers.
The fleece acts as an insulating material in the event of temperature fluctuations



Its main function is to protect the lining from erosion caused by the structure, thus lengthening the life of the reinforced membrane.

NOT
ALL GEOTEXTILES ARE
THE SAME!!
RENOLIT ALKORPLUS geotextile is made of blue polypropylene, which is rot-proof, and always marked with the RENOLIT ALKORPLUS brand.





Lts main function is the lining against bacteria,
Microorganisms and damaged areas
in the subsoil protect and thus extend
the service life of the fabric-reinforced

Why is the use of RENOLIT ALKORPLAN geotextile also recommended?

- Thanks to its fungicidal treatment, it avoids the proliferation of microorganisms between the reinforced membrane and the pool shell caused by the moisture of the ground or the pre-existence of organic elements, and thus the risk of transferral to the swimming pool water.
- Visually softens possible irregularities in the support.
- Adds comfort to the bathers steps.
- Acts as a heat insulator keeping the cold or the heat in the pool for longer, gaining up to 2 degrees.

BRT COVERS

STANDARD
SWIMMING POOL COVERS

Description
The Epervier cover simplifies and streamlines winterizing.
It protects the pool against leaves and debris, UV light,
photosynthesis, falling objects. It can be used with an
existing fastening system.

Cleverly designed, this durable, light-weight cover
guarantees optimum pool safety and complies with the
French standard NF P 90-308 (depending on the finish).

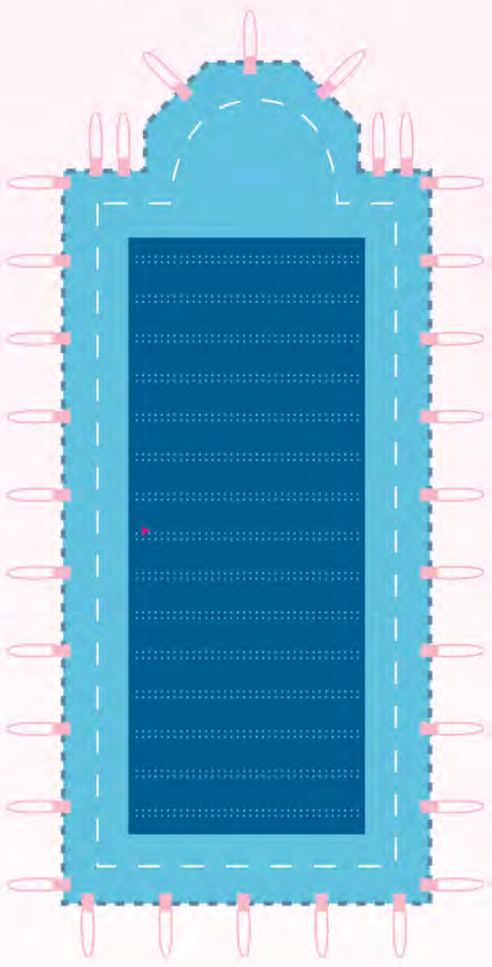

Specs
- Protects the exposed area of the pool lining,
- Inhibits photosynthesis,
- Catches leaves and debris,
- Secures the pool,
- Excellent tensile strength,
- Great dimensional stability,
- Light and easy to install,
- Suitable for large pools,
- Ideal for pre-drilled decks,
- Delivered with a storage bag.

Color



WINTER SAFE
SWIMMING POOL COVERS

Description
The WINTERSAFE cover provides exceptional protection
to your pool throughout the winter.
No more problems with leaves and debris, discolouration
of your membrane, the growth of algae or other nuisances.
Your pool can be reopened in one step.

Its sophisticated design blends beauty with toughness
while complying with the safety standard NF P 90-308.
It integrates easily into your pool surrounds, and optimises safety around your pool.

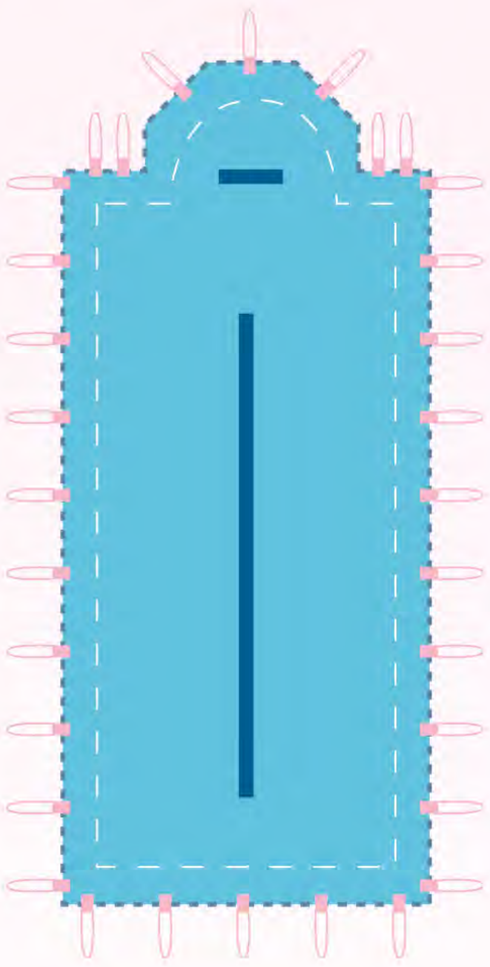

Specs
- Protects the parts of pool above the water line
- Inhibits photosynthesis
- Catches dirt and debris
- Secures the pool
- Excellent tensile stress loading
- Great dimensional stability

Color



COVER AIR
SWIMMING POOL COVERS

Description
The COVER AIR mesh cover provide excellent protection
against accidental falls into the pool: this strong cover
protects and safeguards your pool providing peace of
mind all winter through.

In addition to offering peace of mind, COVER AIR covers
are beautiful, exceptionally hard wearing and very easy
to maintain.

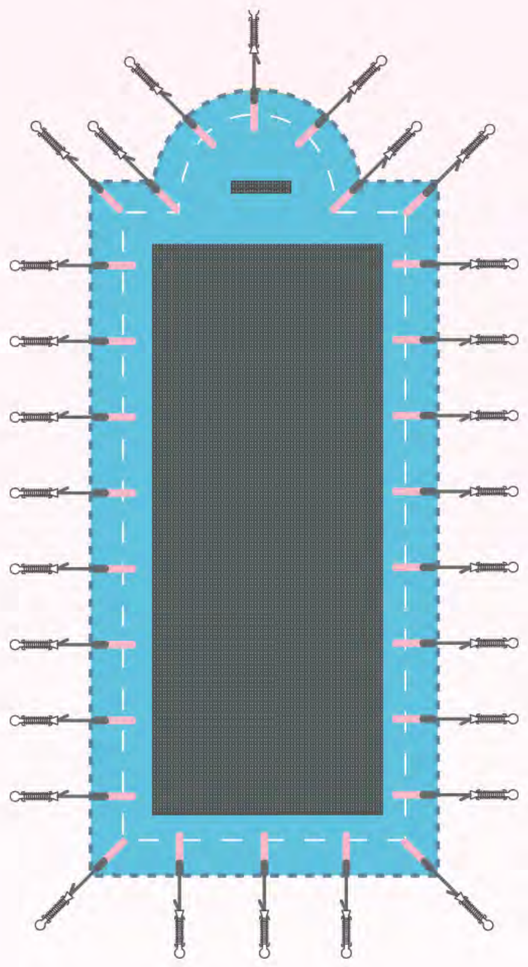

Specs
- Reduces the risk of falls into the pool
- Retains leaves and debris
- Excellent tensile strength
- Outstanding dimensional stability
- Ideal for large pools and to protect automatic
covers

Color





STANDARD
SWIMMING POOL COVERS

Description

- Protects the exposed area of the pool lining,
- Inhibits photosynthesis,
- Catches leaves and debris,
- Secures the pool,
- Excellent tensile strength,
- Great dimensional stability,
- Light and easy to install,
- Suitable for large pools,
- Ideal for pre-drilled decks,
- Delivered with a storage bag.

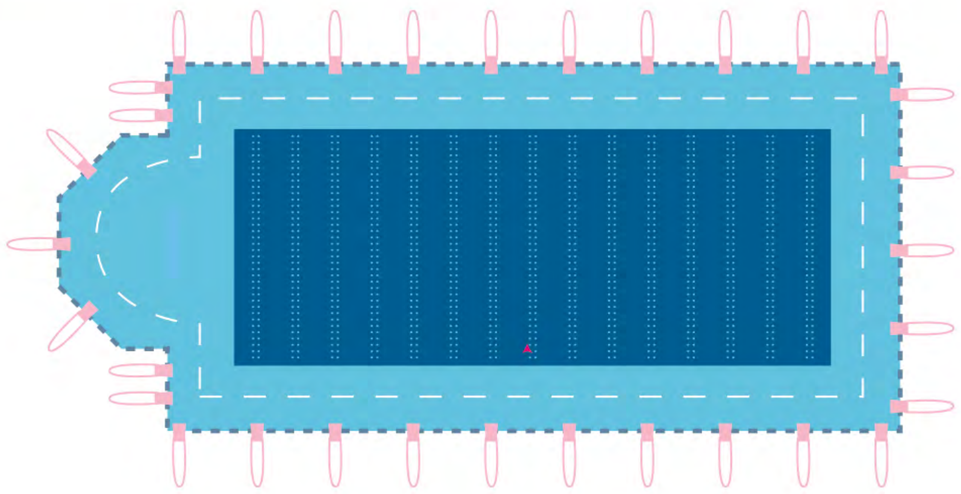

CODE	MODEL	SIZE	PRICE
BRTCA12	Standard Cover	1 m²	€
BRTCA13	Ventil	1	€
BRTCA14	Hook Attachment Kit	1	€
BRTCA15	Floor Fixing Apparatus	1	€

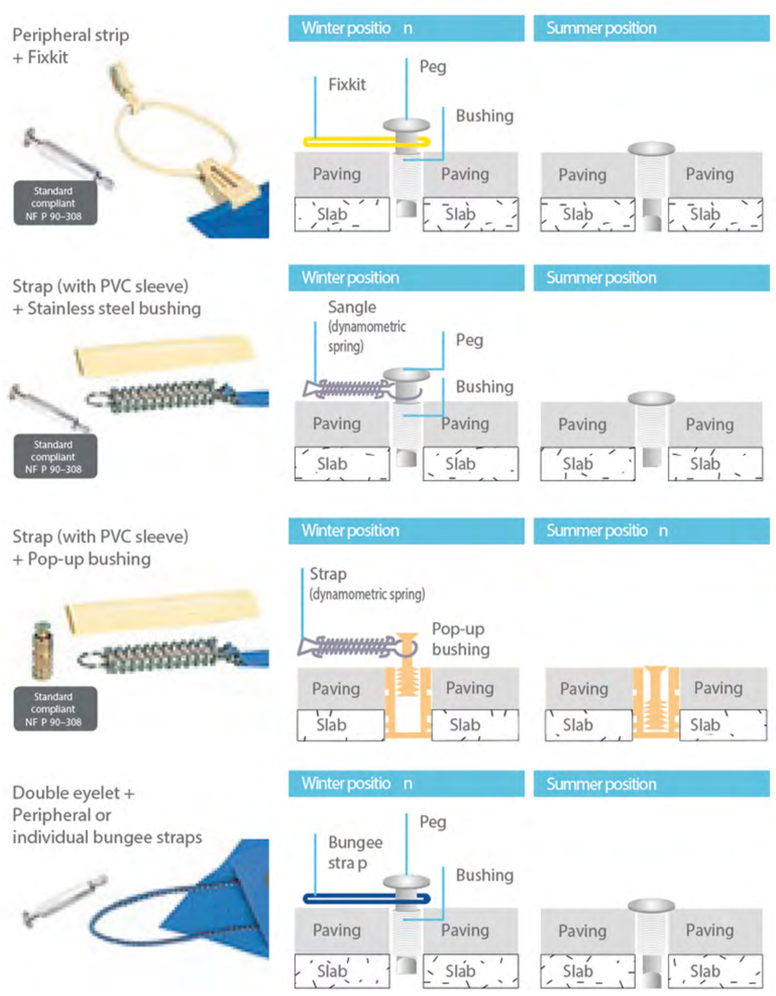

The Epervier cover simplifies and streamlines winterizing. It protects the pool against leaves and debris, UV light, photosynthesis, falling objects. It can be used with an existing fastening system.

Cleverly designed, this durable, light-weight cover guarantees optimum pool safety and complies with the French standard NF P 90-308 (depending on the finish).

Installation, removal and cleaning have been optimised with respect to conventional covers.

Its sober and discreet appearance allows it to blend into any pool environment.

Epervier is an opaque cover made of reinforced, prestressed, woven polyester, induction coated with PVC.

The surface in contact with the coping is protected by a wide, specially reinforced peripheral strip.

The underside of the strip in contact with the coping, is beige coloured to prevent staining.

The entire surface of the fabric, which is manufactured exclusively for our factories, is covered with microperforations
that allow rain water to filter through but
block light. Epervier covers are perfectly flat, even those made for pools that features steps and free-form pools.



WINTER SAFE

SWIMMING POOL COVERS

Description

- Protects the parts of pool above the water line
- Inhibits photosynthesis
- Catches dirt and debris
- Secures the pool
- Excellent tensile stress loading
- Great dimensional stability

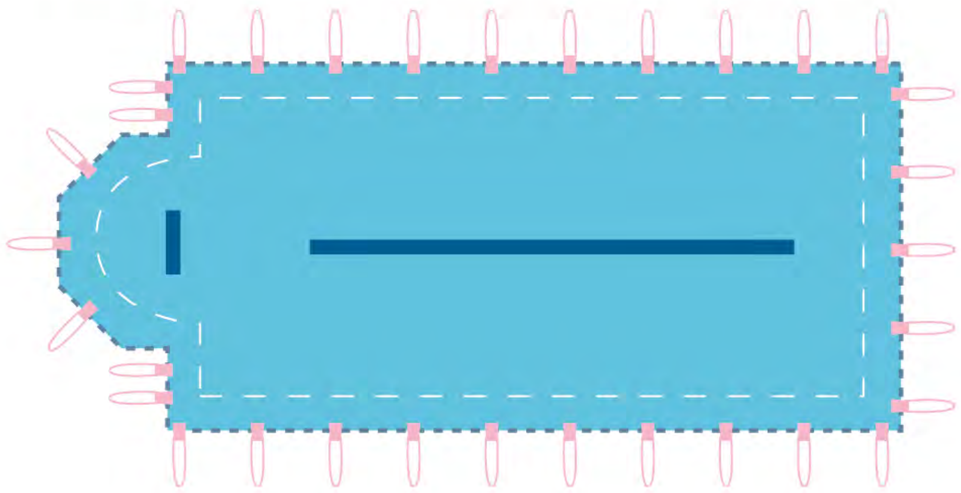

CODE	MODEL	SIZE	PRICE
BRTCA07	Winter Cover	1 m²	€
BRTCA08	Ventil	1	€
BRTCA09	Hook Attachment Kit	1	€
BRTCA10	Floor Fixing Apparatus	1	€

Peripheral snap rod + Fixkit



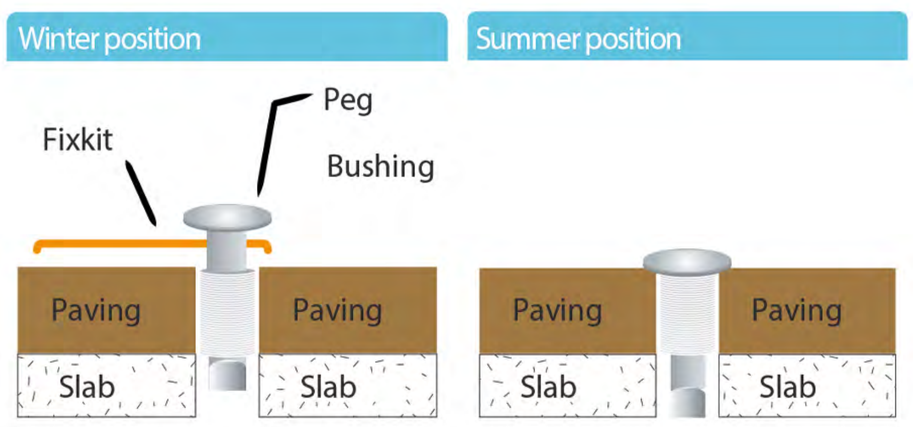

The WINTERSAFE cover provides exceptional protection to your pool throughout the winter.

No more problems with leaves and debris, discolouration of your membrane, the growth of algae or other nuisances.

Your pool can be reopened in one step.

Its sophisticated design blends beauty with toughness while complying with the safety standard NF P 90-308.

It integrates easily into your pool surrounds, and optimises safety around your pool.

WINTERSAFE is an opaque, PVC coated reinforced woven 650g polyester cover. The surface in contact with the ground is beige to prevent discolouration of the coping. Cleverly spaced perforations allow rain water to drain rapidly, thus avoiding the formation of water pockets.

Covers with step pieces and free form covers feature additional perforations to ensure efficient drainage. The diameter of the perforations is calculated to limit the passage of light in order to prevent problems associated with photosynthesis.

WINTERSAFE's PVC coating is UV stabilised and is not deteriorated by chlorinated products. Its glossy, varnished surface is beautiful, stain resistant and very easy to clean.

COVERS



AIR COVER
FOR SWIMMING POOL

Features

Buying and installing winter pool cover is one of the best investments a pool owner can make in their pool.

Winter pool covers are one of the most important pool equipment because they prevent drowning for animals, children and even adults.

Winter pool covers are firmly attached to the pool's sundeck with a series of hooks, unlike summer solar covers that sit on the surface of the pool.

These hooks hold the cover tautly over the pool, and with the weight of a person or animal, the cover is thrown into the water.
prevent it from sinking.

Our winter pool cover is light and durable.
While preventing dirt and waste from entering the pool, it also protects the pool from sun rays and prevents the formation of algae and bacteria.

Winter Air Cover











CODE	MODEL	SIZE	PRICE
BRTCA01	Cover Air 1100gr	1 m^2	€
BRTCA02	Ventil	1	€
BRTCA03	Hook Attachment Kit	1	€
BRTCA04	Floor Fixing Apparatus	1	€
BRTCA05	Blower	1	€

COVER



2 YEAR WARRANTY

SOLAR STANDARD

SWIMMING POOL COVERS

Description

Solar Standard covers are made of UV stabilised polyethylene film with an innovative 'GeoBubble' bubble shape.

Two finishes are available:

- Standard finish
- Reinforced band finish

Solar Standard covers feature the following:

- Reflective, protective tarpaulin. with three fastening straps.
- Eyelets to attach the roller and tensioning strap eyelets in each corner at the opposite end to the roller.

Technical Data

Thickness: 500 microns
Bubble type: GeoBubble

Colour

Blue
GeoBubble

Grey Blue
EnergyGuard



Available Finishes

Standard

Reinforced band



Price per m² from -exVAT



2 YEAR WARRANTY

SOLAR CLASSIC

SWIMMING POOL COVERS

Description

Solar Classic covers are made of UV stabilised polyethylene film.

Three finishes are available:

- Unhemmed finish
- Standard finish
- Reinforced band finish

Solar Classic model covers feature the following:

- Reflective, protective tarpaulin (except for covers with an unhemmed finish) with 3 fastening straps.
- Eyelets to attach the roller and eyelets in each corner at the opposite end to the roller. (except for covers with an unhemmed finish).

Technical Data

Thickness: 400 microns
Bubble diameter: 10 mm

Colour

Blue

Silver

Translucent



Available Finishes

Unhemmed

Standard

Reinforced band

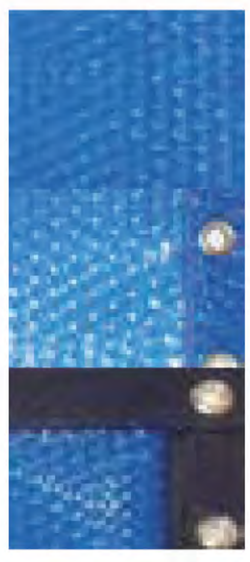

Price per m² from -exVAT



STANDARD SOLAR COVERS

SOLAR COVERS

Solar covers are made of UV stabilised polyethylene film with an innovative 'GeoBubble' bubble shape.
Two finishes are available;

- Standard finish
- Reinforced band finish

Standard solar covers feature the following

- Reflective. protective tarpaulin, with three fastening straps.
- Eyelets to attach the roller and eyelets to attach the tensioning strap.



500Micron

NON-STANDARD STEPS

The options for additional eyelets or step pieces is available for all bubble covers.
The step pieces for the STANDARD and CLASSIC are the same.

They feature

- a reinforced band around the periphery if the cover has a standard or reinforced band finish.
- an unhemmed finish if the cover finish is unhemmed.

The prices opposite correspond to the supplement to be added to the price of the isothermal covers.

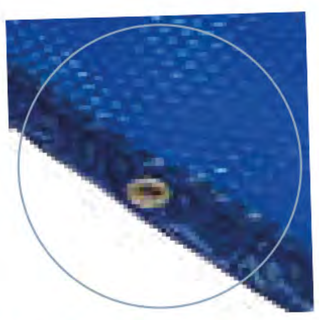

REINFORCED BAND FINISH

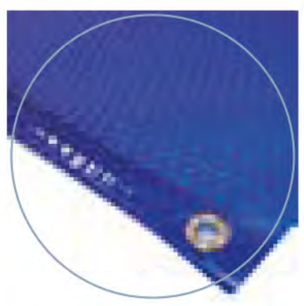

STANDARD FINISH

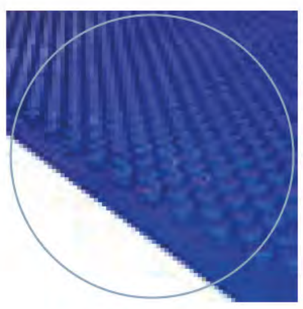

AS CUT, NO HEM

CODE	MODEL	SIZE	PRICE
BRTSLS01	Standard Solar Cover	1 m^2	€
BRTSLS02	Connector Kit	1	€
BRTSLS03	-	1	€



COVERS

CLASSIC SOLAR COVERS

SOLAR COVERS

Classic solar covers are made of UV stabilised polyethylene film. Three finishes are available:

- Unhemmed finish
- Standard finish
- Reinforced band finish

Classic covers feature the following

- Reflective, protective tarpaulin (except for covers with an unhemmed finish) with 3 fastening straps.
- Eyelets to attach the roller and eyelets in each corner at the opposite end to the roller, (except for covers with an unhemmed finish).

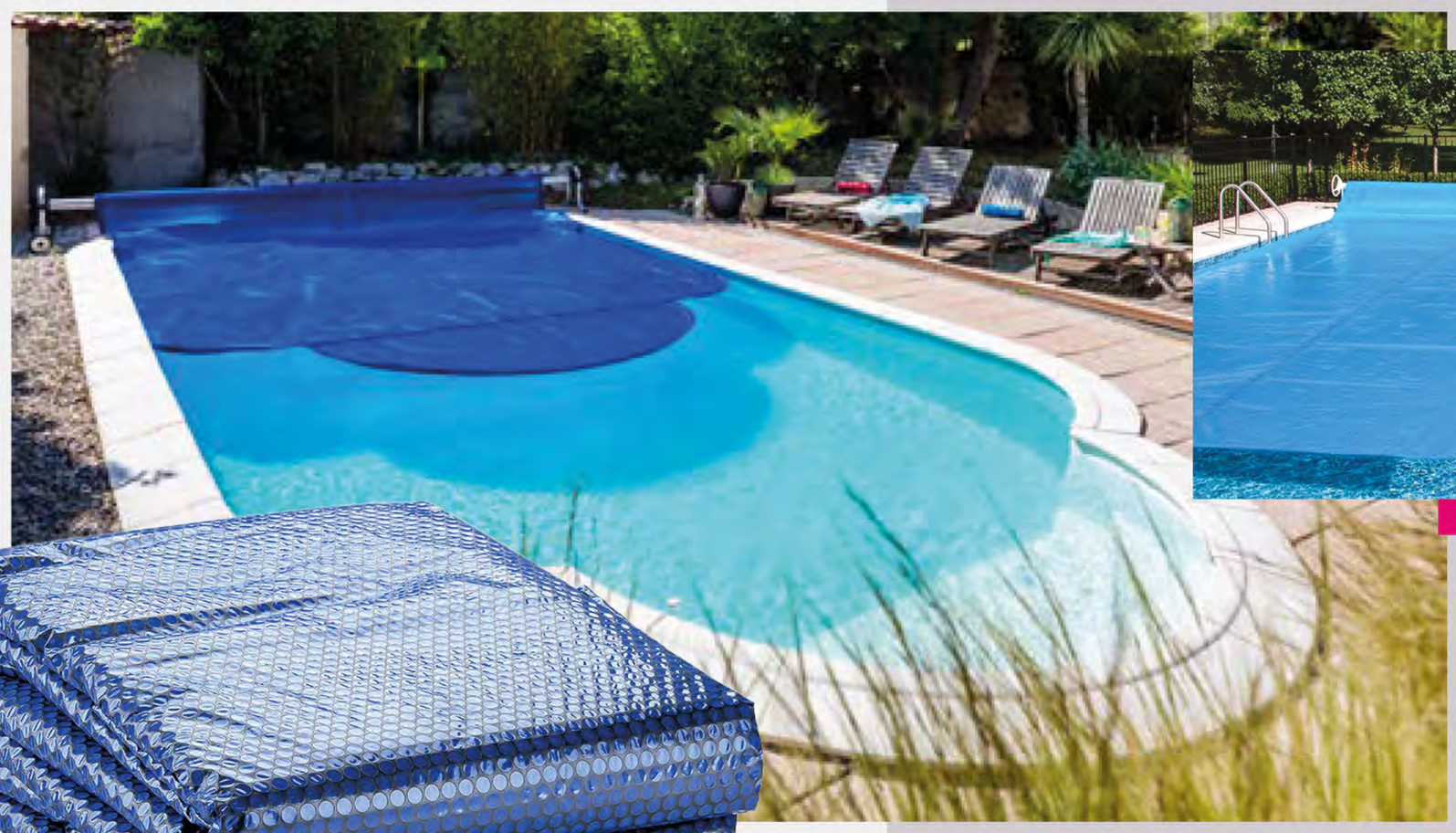





400Micron

EnergyGuard GeoBubble bubble covers absorb and retain heat energy from the sun and inhibit photosynthesis.

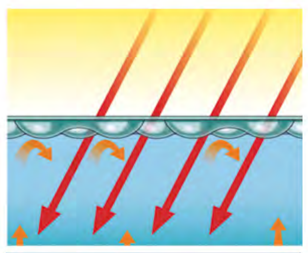

UVI ADDITIVE

UVI (Ultra Violet Inhibitors) Thanks to the additives that prevent ultraviolet rays, your solar pool cover is protected from the harmful rays of the sun. It is 3 to 4 times longer lasting than pool covers produced without UVI additives.

FLOATING COVER

Blue Garden solar pool cover floats on the pool without sinking thanks to the air bubbles on it. It is very easy to lay your Blue Garden solar pool cover and collect it from your pool.

POOL BLUE

Swimming pools are an important accessory of homes, hotels and workplaces with their decorative and pleasant appearance as well as their functionality. SOLAR Pool cover creates a pleasant appearance with its bubble surface and vivid blue color.

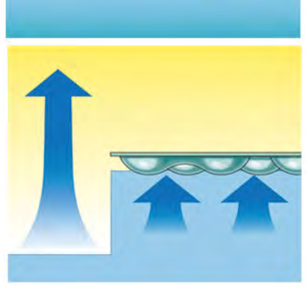

HIGH THERMAL INSULATION

Thanks to the air bubbles on the Blue Garden solar pool cover, more heat insulation is provided than flat films. To explain briefly, the air molecules trapped in the bubbles form a thermal bridge between the pool water and the cold air, and protect the heat energy accumulated in the pool water much better than the flat pool covers. Heat protection can be further increased by optionally covering with aluminum foil.

CODE	MODEL	SIZE	PRICE
BRTSL01	Standard Solar Classic	1 m^2	€
BRTSL02	Connector Kit	1	€
BRTSL03	-	1	€



COVERS



AQUAROLL
COVERS ROLL CAR

Technical Data

- Asymmetrical T-shaped end-stands for extra stability.
- 304 L SS tubes, Ø 40 mm, fitted with integrated axle bearings.
- One bare end-stand, one end-stand fitted with 2 wheels, Ø 170mm.
- Axle height – 420 mm axle diameter – 95 mm.
- Comes with 13 bungee straps.

CODE	MODEL	PRICE
BRTQ01	Aquaroll Cover Roller 2.50 to 4m	€
BRTQ02	Aquaroll Cover Roller 4 to 5m	€





BWT K939 480 WBX
COVERS ROLL

Technical Data

- Asymmetrical T-shaped end-stands for extra stability.
- 304 L SS tubes, 40 mm, fitted with integrated axle bearings.
- One bare end-stand, one end-stand fitted with 2 wheels, 170mm.
- Axle height – 420 mm axle diameter – 95 mm.
- Comes with 13 bungee straps.



BWT K939 511 WBX
COVERS ROLL

Technical Data

- Asymmetrical T-shaped end-stands for extra stability.
- 304 L SS tubes, 40 mm, fitted with integrated axle bearings.
- One bare end-stand, one end-stand fitted with 2 wheels, 170mm.
- Axle height – 420 mm axle diameter – 95 mm.
- Comes with 13 bungee straps.



KODIDO CR50 + CR43

COVERS ROLL CAR

Technical Data

The motorized winder Kokido CR50+CR43BX/EU makes it as easy as possible to use the protective and heat-saving pool cover. The device is equipped with an electric motor (powered by a battery) and a remote control. This allows you to control the winder remotely.

CODE	MODEL	PRICE
KOK0011	Kokido CR43	€
KOK0012	Kokido CR50	€



The body structure is durable, lightweight and corrosion resistant. The reliable automatic mechanism provides smooth and uniform winding. The unit is equipped with a hand wheel with a comfortable grip. Simple system for fixing the roller with a handle. Durable wheels with tires provide good maneuverability. The device is equipped with tubes.

- ▶ Type: mobile, motorized
- ▶ Number of tubes: 3 pcs
- ▶ Tube size: diameter 98 mm, length 215 cm
- ▶ Total span: 215–645 cm



NEW

cover cars<<<







NEW COVERS <<<

WATER WONT FREEZE

PILLOWS

ANTI FREEZE PILLOWS

Technical Data

- 4 × 4-foot air pillow supports your winter pool cover
- Pillow is for above ground pools to help prolong and protect your above ground pool cover
- The pillow pushes your pool cover up off the water's surface so the water won't freeze to your pool cover; Keeps water off the top of your pool cover
- Easily inflates through an integrated air valve
- Winter protection; Material: Vinyl; Color: Blue; Dimensions (L x W): 4 × 4 feet



RELAX
JACUZZI HERE

BRT
SPA
JACUZZI



BERGEN SPA & JACUZZI

- HEATING SYSTEM UP TO 40°C
- SAFE HEATING TECHNOLOGY
- WHISPER-QUIET OPERATION
- UV-C ULTRAVIOLET
- 6 PERSONS



CAMARO SPA & JACUZZI

- HEATING SYSTEM UP TO 40°C
- SAFE HEATING TECHNOLOGY
- WHISPER-QUIET OPERATION
- ENERGY SAVING TIMER
- 6 PERSONS



EXOTIC SPA & JACUZZI

- HEATING SYSTEM UP TO 40°C
- SAFE HEATING TECHNOLOGY
- WHISPER-QUIET OPERATION
- ENERGY SAVING TIMER
- 6 PERSONS



MONO SPA & JACUZZI

- HEATING SYSTEM UP TO 40°C
- SAFE HEATING TECHNOLOGY
- WHISPER-QUIET OPERATION
- ENERGY SAVING TIMER
- 6 PERSONS



OTTOMAN SPA & JACUZZI

- HEATING SYSTEM UP TO 40°C
- SAFE HEATING TECHNOLOGY
- WHISPER-QUIET OPERATION
- ENERGY SAVING TIMER
- 6 PERSONS



TUSCANY SPA & JACUZZI

- HEATING SYSTEM UP TO 40°C
- SAFE HEATING TECHNOLOGY
- WHISPER-QUIET OPERATION
- OZONE TECHNOLOGY
- 6 PERSONS



URBAN SPA & JACUZZI

- HEATING SYSTEM UP TO 40°C
- SAFE HEATING TECHNOLOGY
- WHISPER-QUIET OPERATION
- ENERGY SAVING TIMER
- 6 PERSONS





BERGEN

SPA & JACUZZI

Featuring an elegant round design and clean lines, BERGEN offers a hint of contemporary design that blends well with a wide variety of home or garden décors. Thousands of air bubbles will help you center your mind and release tension in your muscles.





BERGEN C-BE042 / 062 / 082

Dimensions	1.80 x 0.70mH 71" x 28"H	2.04 x 0.70mH 80" x 28"H	2.24 x 0.70mH 88" x 28"H
Water Capacity	700 L / 184 Gal.	930 L / 245 Gal.	1120 L / 295 Gal.
Net Weight	21 Kg / 46.3 Lbs	23.5 Kg / 51.8 Lbs	27 Kg / 59.5 Lbs
Air Jets	118	138	144
Seating	4	6	8
Heat Increasing Rate	1.5 - 2°C/Hour	1.2 - 1.8°C/Hour	0.8 - 1.2°C/Hour

Control System	220 - 240V/50Hz	Massage Air Blower	600W
Heater	1500W	Filter Pump	1800L/hr



SPA SYSTEMS



CAMARO

SPA & JACUZZI

Pamper yourself with uplifting, renewing bubble spa. Perfectly placed air jets release thousands of cushioning bubbles to massage your body at a level of intensity you prefer. Camaro features a carbon fiber pattern fabric and chic design. The bath's lavish size provides ample room to move, while the overflow style invites full-body immersion.



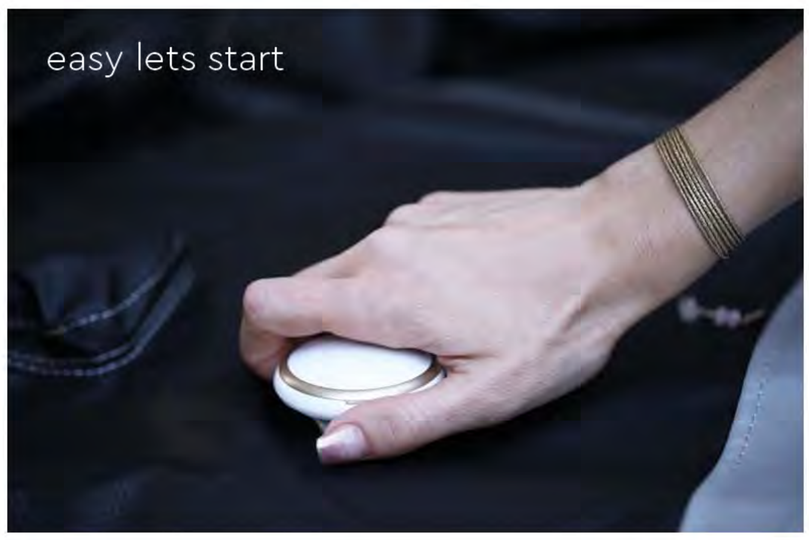



CAMARO P-CA049 / 069

Dimensions	1.80 x 0.70mH 71″ x 28″H	2.04 x 0.70mH 80″ x 28″H
Water Capacity	700 L / 148 Gal.	930 L / 245 Gal.
Net Weight	31.5 Kg / 69.4 Lbs	35 Kg / 77.2 Lbs
Air Jets	118	138
Seating	4	6
Heat Increasing Rate	1.5 - 2°C/Hour	1.2 - 1.8°C/Hour

Control System	220 - 240V/50Hz
Heater	1500W
Massage Air Blower	720W - 3 levels (L1: 300W, L2: 500W, L3: 720W)
Filter Pump	1420L/Hr
Integrated Ozone Generator	5.5W
Ozone Output	30 - 50Mg/Hr



SYSTEMS SPA



EXOTIC

SPA & JACUZZI

Blissful bubbles ease away stress in this exotic spa. Air jets release thousands of bubbles to massage your body at the level of intensity you prefer. Exotic fabric, sophisticated details and the classic design create an instantly memorable and luxurious addition to your home decor. level of intensity you prefer. Exotic fabric, sophisticated details and the classic design create an instantly memorable





EXOTIC P-EX049 / 069

Dimensions	1.80 x 0.70mH 71″ x 28″H	2.04 x 0.70mH 80″ x 28″H
Water Capacity	700 L / 184 Gal.	930 L / 245 Gal.
Net Weight	34.5 Kg / 76.1 Lbs	39 Kg / 86 Lbs
Air Jets	118	138
Seating	4	6
Heat Increasing Rate	1.5 - 2°C/Hour	1.2 - 1.8°C/Hour

Control System	220 - 240V/50Hz
Heater	1500W
Massage Air Blower	720W - 3 levels (L1: 300W, L2: 500W, L3: 720W)
Filter Pump	1420L/Hr
Integrated Ozone Generator	5.5W
Ozone Output	30 - 50Mg/Hr



SPA SYSTEMS



MONO

SPA & JACUZZI

Featuring the metallic stripes on the iron grey textured exterior wall, MONO is a modernist of the inflatable hot tub. No matter to be placed indoor or outdoor, MONO beacons your house with the revolutionary concept.



MONO F-MO062W/082W

Dimensions	1.73 x 0.65mH / 68" x 26"H	1.92 x 0.65mH / 75.5" x 26"H
Water Capacity	930 L / 245 Gal.	1120 L / 295 Gal.
Net Weight	37 Kg / 81.6 Lbs	39.5 Kg / 86.9 Lbs
Air Jets	138	144
Seating	6	8
Heat Increasing Rate	1.5 - 2.0°C/Hour	1.2 - 1.8°C/Hour

Control System	220 - 240V/50Hz
Heater	2200W
Massage Air Blower	720W - 3 levels (L1: 300W, L2: 500W, L3: 720W)
Filter Pump	1800L/Hr
Integrated Ozone Generator	5.5W
Ozone Output	30 - 50Mg/Hr





SPA SYSTEMS



OTTOMAN

SPA & JACUZZI

Ottoman is made to perfection. Its outer fabric has applied the latest printing technique, the rattan pattern epitomizes our dedication to the contemporary style. It is named after the rattan weaving method. OTTOMAN is available in 6-bather size.



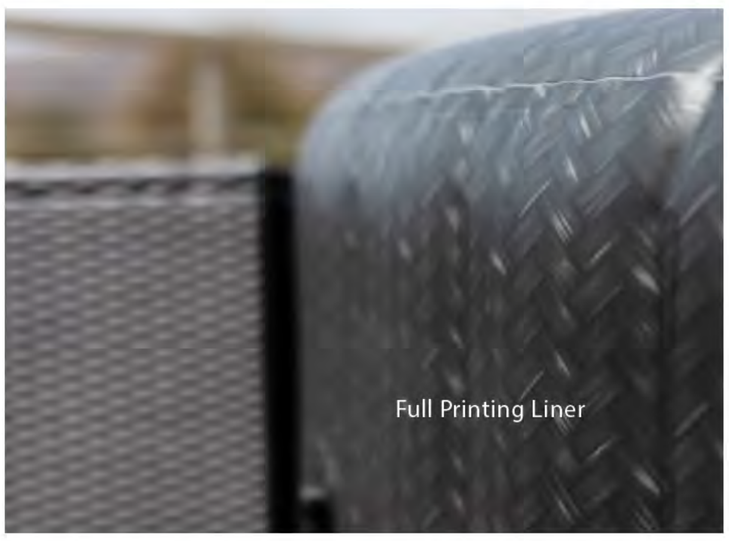

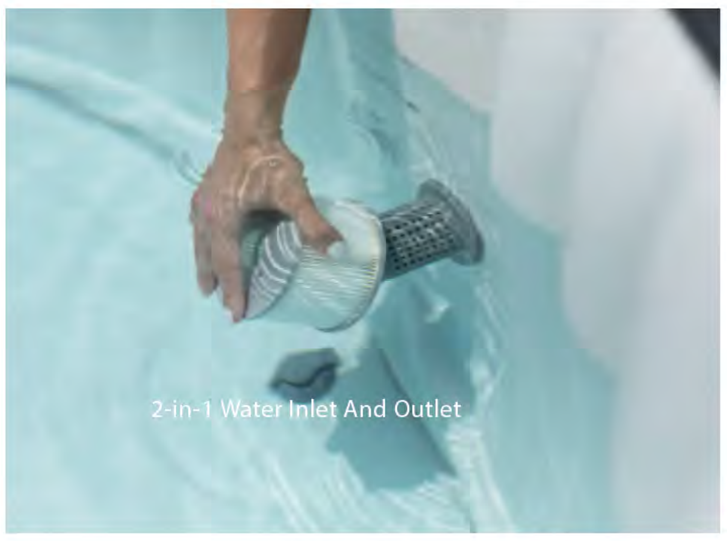

OTTOMAN C-OM062

Dimensions	2.04 x 0.70mH / 80" x 28"H
Water Capacity	930 L / 245 Gal.
Net Weight	23.5 Kg / 51.8 Lbs
Air Jets	138
Seating	6
Heat Increasing Rate	1.2 - 1.8°C/Hour

Control System	220 - 240V/50Hz	Massage Air Blower	600W
Heater	1500W	Filter Pump	1800L/hr



SPA SYSTEMS



TUSCANY

SPA & JACUZZI

Experience a luxurious and unique bubble massage in a portable spa designed to provide years of independence and safety. Tuscany collection features a clean, contemporary design in a popular, acrylic-standard looking. Plastic wood panel ensures product durability, while its easy installation allows great portability.





TUSCANY F-TU062W

Dimensions	1.93 x 0.73mH / 76" x 29"H
Water Capacity	1100 L / 291 Gal.
Net Weight	75 Kg / 165.3 Lbs
Air Jets	138
Seating	6
Heat Increasing Rate	1.2 - 1.8°C/Hour

Control System	220 - 240V/50Hz
Heater	2200W
Massage Air Blower	720W - 3 levels (L1: 300W, L2: 500W, L3: 720W)
Filter Pump	1800L/Hr
Integrated Ozone Generator	5.5W
Ozone Output	30 - 50Mg/Hr



SPA SYSTEMS



URBAN

SPA & JACUZZI

URBAN is nicely made in a very subtle blueberry color with the iconic MSpa embossed fabric. Partnered with the smart cream liner for a feeling of soft and warm. It's a signature piece from URBAN range represents the very best in MSpa design, made for modern lifestyle family.







URBAN U-RB062/082

Dimensions	2.04 x 0.70mH / 80" x 28"H	2.24 x 0.70mH / 88" x 28"H
Water Capacity	930 L / 245 Gal.	1120 L / 295 Gal.
Net Weight	32.5 Kg / 71.7 Lbs	35 Kg / 77.2 Lbs
Air Jets	138	144
Seating	6	8
Heat Increasing Rate	1.5 - 2.0°C/Hour	1.2 - 1.8°C/Hour

Control System	220 - 240V/50Hz
Heater	2200W
Massage Air Blower	720W - 3 levels (L1: 300W, L2: 500W, L3: 720W)
Filter Pump	1800L/Hr
Integrated Ozone Generator	5.5W
Ozone Output	30 - 50Mg/Hr

SPA SYSTEMS





STRAW STEP
FOR JACUZZI & SPA

CODE	MODEL	PRICE
0153210	Jakuzi Spa Straw STEP	€





STRAW STEP ROUND
FOR JACUZZI & SPA

CODE	MODEL	PRICE
0153211	Jakuzi Spa Straw Step Round	€



OUTDOOR MESH CABINET
FOR JACUZZI & SPA

CODE	MODEL	PRICE
0153212	Jakuzi Spa Outdoor Mesh Cabinet	€



LARGE OPEN WIRE MESH CABINET
FOR JACUZZI & SPA

CODE	MODEL	PRICE
0153213	Jakuzi Spa Large Open Wire Mesh Cabinet	€



FILTER 90 PLEATED 2022 VERSION
JACUZZI & SPA

CODE	MODEL	PRICE
0653241	Jakuzi Spa Filter 90 Pleated 2022 Version	€

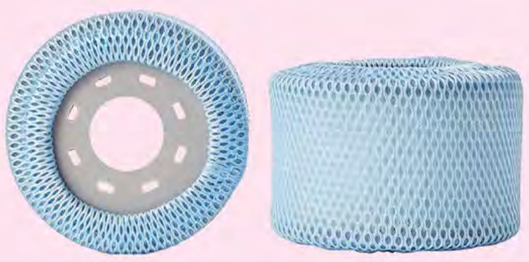

FILTER 90 PLEATED 2021 VERSION
JACUZZI & SPA

CODE	MODEL	PRICE
0653242	Jakuzi Spa Filter 90 Pleated 2021 Version	€

JACUZZI
ACCESSORY

MESH CABINET WITH LID
JACUZZI & SPA



CODE	MODEL	PRICE
0153214	Jakuzi Spa Mesh Cabinet With Lid	€



LARGE WIRE MESH CABINET
JACUZZI & SPA



CODE	MODEL	PRICE
0153215	Jakuzi Spa Large Wire Mesh Cabinet	€



INFLATABLE CUSHION SET OF 2
JACUZZI & SPA

CODE	MODEL	PRICE
0153216	Jakuzi Spa Inflatable Cushion Set of 2	€



INFLATABLE TABLE FOR 6 PERSONS
JACUZZI & SPA

CODE	MODEL	PRICE
0153217	Jakuzi Spa Inflatable Table for 6 Persons	€



ICE BOX
JACUZZI & SPA

CODE	MODEL	PRICE
0653243	Jakuzi Spa Ice Box	€



COOLER ACCESSORY
JACUZZI & SPA

CODE	MODEL	PRICE
0653244	Jakuzi Spa Cooler Accessory	€



BARUT GROUP

FORCE WITH POOLS



1

PUMPS



TORK SERIES

- THE MARKET REFERENCE
- ECONOMY
- 0,75HP & 1HP & 1,50HP OPTIONS



POWER SERIES

- TRIED AND TESTED DESIGN
- GOOD PERFORMANCE
- 2HP & 3HP & 4HP OPTIONS



BWT EUROSTAR HF

- AT AN EQUIVALENT FLOW RATE, THE ENERGY CONSUMPTION IS 20% LESS THAN MOST PUMPS AVAILABLE ON THE MARKET
- SELF-PRIMING
- VERSATILE, MODULAR HYDRAULIC CONNECTIONS
- RANGE FROM 7 to 40 m^3/h
- RUNS VERY SILENTLY



BWT EUROSTAR II

- THE MARKET REFERENCE
- TRIED AND TESTED DESIGN
- CORROSION PROOF
- SELF-PRIMING
- THE PUMP BODY AND PRE-FILTER ARE MADE OF FIBREGLASS REINFORCED POLYPROPYLENE
- RANGE FROM 7 to 18 m^3/h
- RUNS VERY SILENTLY



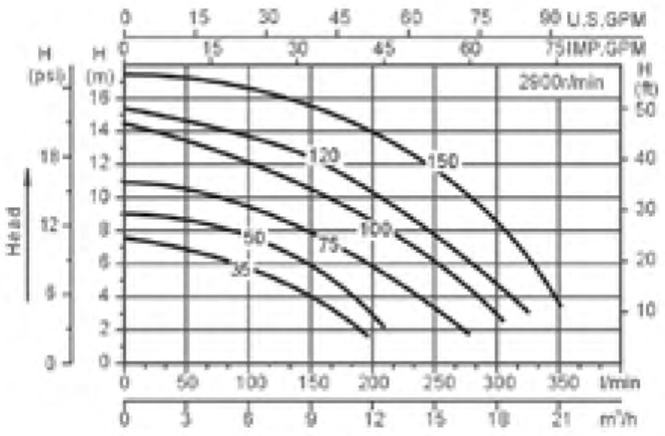

pumps

TORK SERIES TORK SERİSİ

PUMPS POMPALAR

Technical data

- Self-priming pool pumps with pre-filter transparent polycarbonate.
- Its cover facilitates the pre-filter basket control.
- 2,850 rpm, 50–60 Hz. AISI-316 stainless steel shaft, noryl fan, carbon ceramic mechanical seal.
- Input and output connections are 1.5".
- It works very quietly thanks to its ergonomic design.

LET'S POWER UP

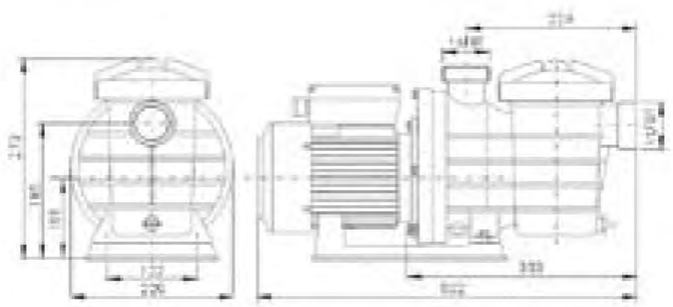

KOD CODE	MODEL MODEL	GÜÇ Hp POWER	GÜÇ Kw POWER Kw	BAĞLANTI CONNECT	Debi FLOW	KG KG	EBAT SIZE
-	Tork Series Monofaze Type	0,33 hp	0,55 kw	50-63	11,00 m^3/h	8,1	535×255×325
-	Tork Series Monofaze Type	0,50 hp	0,55 kw	50-63	11,00 m^3/h	9,3	535×255×325
-	Tork Series Monofaze Type	0,75 hp	0,55 kw	50-63	11,00 m^3/h	10,6	535×255×325
-	Tork Series Monofaze Type	1,00 hp	0,75 kw	50-63	14,50 m^3/h	11,4	535×255×325
-	Tork Series Trifaze Type	1,00 hp	0,75 kw	50-63	14,50 m^3/h	11,4	535×255×325
-	Tork Series Monofaze Type	1,50 hp	1,50 kw	50-63	17,50 m^3/h	12,8	535×255×325
-	Tork Series Trifaze Type	1,50 hp	1,50 kw	50-63	17,50 m^3/h	12,8	535×255×325



Pumps chlorinated water or sea water 24hr running...

1	Tie-in Nut
2	Tie
3	O-Ring
4	Drainge Plug
5	O-Ring
6	Pump Casing
7	Filter
8	O-Ring
9	Transparent cover
10	Rubber gasket
11	Difusser
12	Impeller
13	Mechanical seal

14	O-Ring
15	Pump Cover
16	Pad
17	Hexagon screw
18	Hexagon screw
19	Motor
20	Block Gine
21	Base
22	Hexagon screw

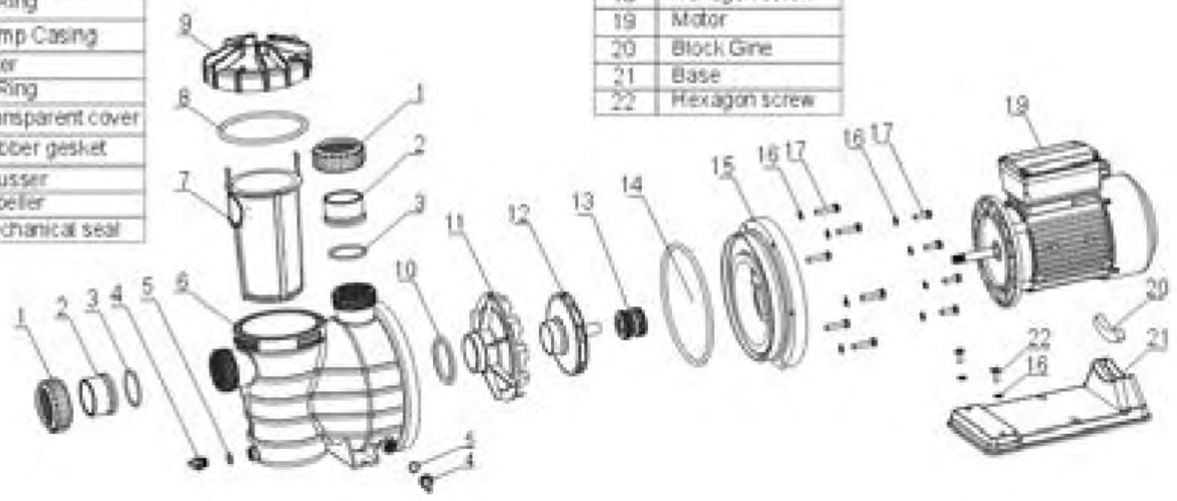

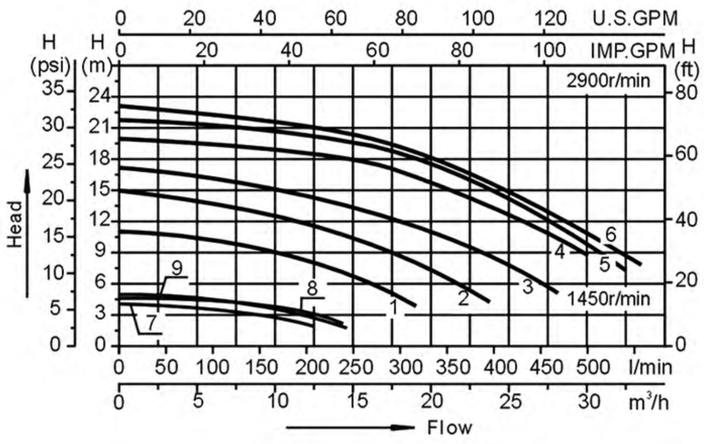



POWER SERIES POWER SERİSİ

PUMPS POMPALAR

Technical Data

- Self-priming pool pumps with pre-filter transparent polycarbonate.
- Its cover facilitates the pre-filter basket control.
- 2,850 rpm, 50–60 Hz. AISI-316 stainless steel shaft, noryl fan, carbon ceramic mechanical seal.
- Input and output connections are 2".
- It works very quietly thanks to its ergonomic design.

LONGER LIFESPAN

RESIDENTAL POOL

SUPER SILENT

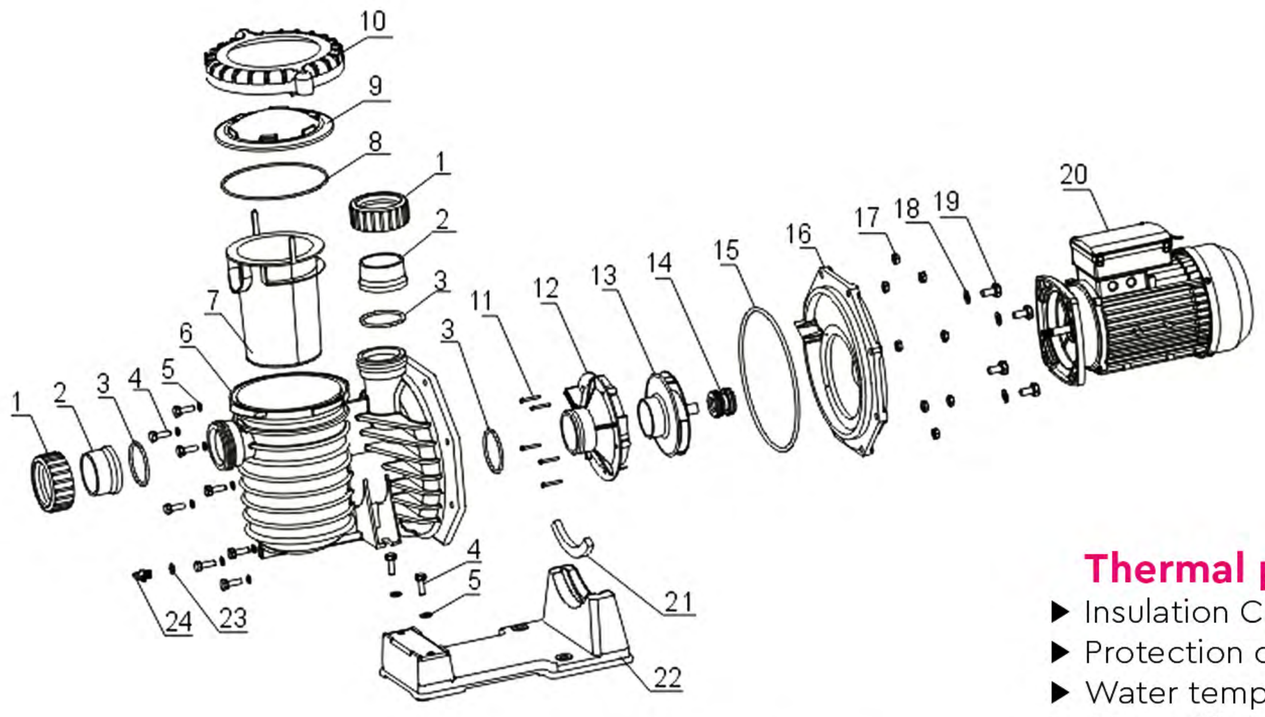

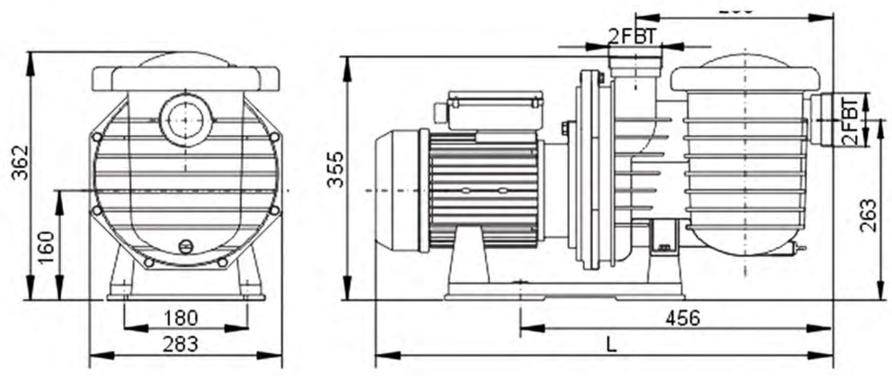

Thermal protector

- Insulation Class F
- Protection class: IP55
- Water temperature up to 5~50°C
- CE certificate
- TUV certified
- Non-self priming performance

Applications

- Pressure boosting for medium/large SPA pool and cleaning system of jetted bath tubs, spa pools.
- Water circulation in a fishery.
- Decorative pool, water display, water processing.
- Weak corrosive liquid (weak acid and weak alkali without solid granules.

KOD CODE	MODEL MODEL	GÜÇ Hp POWER	GÜÇ Kw POWER Kw	BAĞLANTI CONNECT	Debi FLOW	KG KG	EBAT SIZE
-	Power Series Monofaze Type	2,00 hp	1,50 kw	63-63	25,50 m³/h	19 Kg	635X310X370
-	Power Series Trifaze Type	2,00 hp	1,50 kw	63-63	25,50 m³/h	19 Kg	635X310X370
-	Power Series Monofaze Type	3,00 hp	2,20 kw	63-63	32,00 m³/h	22 Kg	655X310X370
-	Power Series Trifaze Type	3,00 hp	2,20 kw	63-63	32,00 m³/h	22 Kg	655X310X370
-	Power Series Monofaze Type	4,00 hp	2,20 kw	63-63	32,00 m³/h	22 Kg	655X310X370
-	Power Series Trifaze Type	4,00 hp	2,20 kw	63-63	32,00 m³/h	22 Kg	655X310X370



BWT EUROSTAR HF

PUMPS POMPALAR

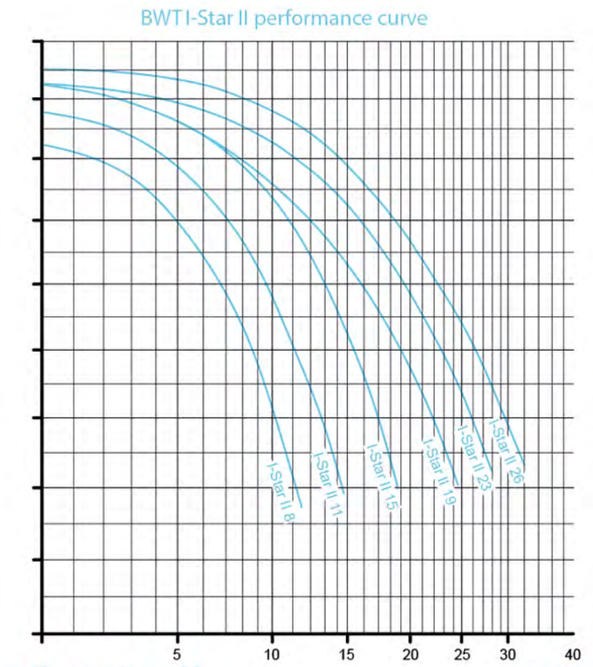



Tried and tested design

30 years experience and a continuous drive for improvement have earned the BWT Eurostar HF pump its reputation. BWT Eurostar HF pumps benefit from the latest innovations in terms of materials.





Technical data

- A lit pre-filter basket that separates into two sections.
- BWT Eurostar HF pumps run very quietly.
- BWT Eurostar HF are self-priming, the mechanical seal is mounted on a protective shaft made of synthetic resin. The motor shaft never comes into contact with the pool water, this means that it is corrosion proof, even in pools treated by salt water electrolysis.
- Single phase pumps are fitted with P2 type capacitors,
- Now even safer: thanks to the impeller's original design, the motor shaft never comes into contact with the pool water. This means that stray current will never leak into the pool.
- The pump body and pre-filter are made of fibreglass reinforced polypropylene, a material that is corrosion proof, even in pools treated by salt electrolysis,
- 2'' tapped inlet and outlet ports compatible with 63 mm or 75 mm female solvent type barrel unions (delivered with the pump),
- Delivered with a tool for opening the pre-filter.

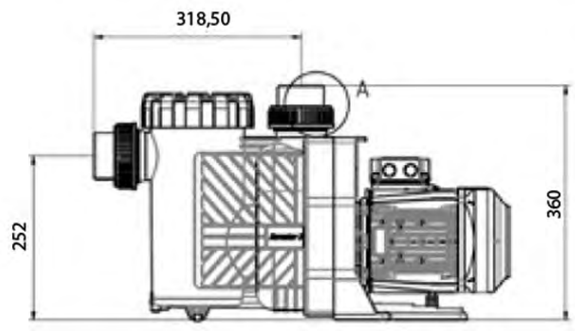

CODE	MODEL	Flowrate m³/h at 10 mWC	max current (A)	P1 kW	P2 kW	Voltage	Acoustic pressure at 1m (dBA)
BWTP01	BWT Eurostar HF 7S, M	7	2.40	0.54	0.30	1 ph	52.9
BWTP02	BWT Eurostar HF 10S, M	10	2.90	0.65	0.45	1 ph	53.6
BWTP03	BWT Eurostar HF 13S, M	13	4.00	0.81	0.55	1 ph	53.2
BWTP04	BWT Eurostar HF 17S, M	17	5.20	1.00	0.75	1 ph	56.1
BWTP05	BWT Eurostar HF 21 M	21	6.70	1.40	1.00	1 ph	64.6
BWTP06	BWT Eurostar HF 26 M	26	7.40	1.70	1.30	1 ph	65.3
BWTP07	BWT Eurostar HF 32 M	32	10.00	2.20	1.80	1 ph	68.6
BWTP08	BWT Eurostar HF 40 M	40	14.40	2.92	2.20	1 ph	73.7
BWTP09	BWT Eurostar HF 10S, T	10	1.25	0.63	0.45	3 ph	-
BWTP10	BWT Eurostar HF 13S, T	13	1.55	0.75	0.55	3 ph	-
BWTP11	BWT Eurostar HF 17S, T	17	1.95	0.93	0.75	3 ph	-
BWTP12	BWT Eurostar HF 21 T	21	2.25	1.26	1.00	3 ph	61.6
BWTP13	BWT Eurostar HF 26 T	26	2.80	1.56	1.30	3 ph	65.8
BWTP14	BWT Eurostar HF 32 T	32	3.85	2.10	1.80	3 ph	70.7
BWTP15	BWT Eurostar HF 40 T	40	4.95	2.54	2.20	3 ph	71.1

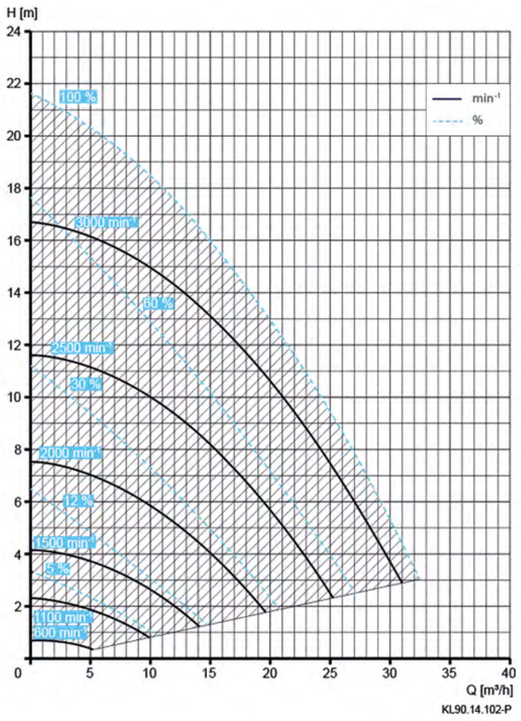



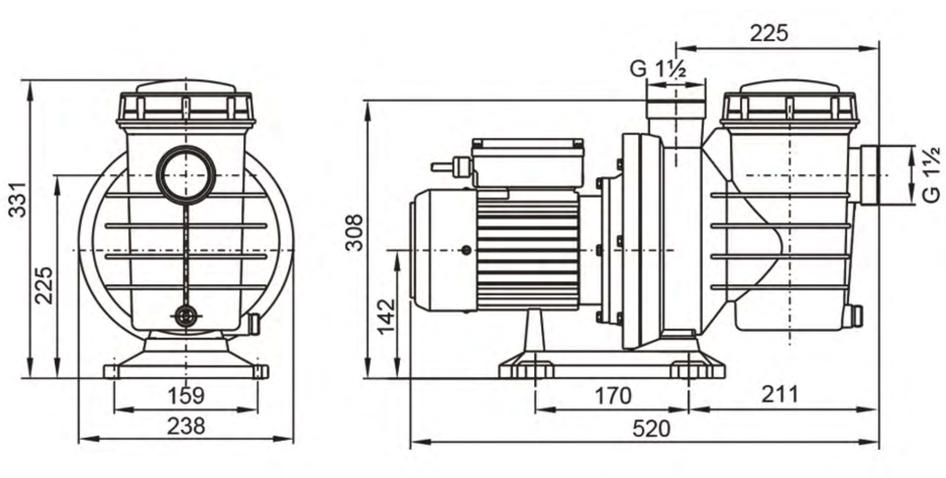

BWT EUROSTAR II

PUMPS POMPALAR

Technical data

- The BWT Eurostar II pump is self-priming. The mechanical seal is mounted on top of the synthetic resin protective shaft cover. As there is no contact between the motor shaft and the pool water, the pump is absolutely corrosion resistant even in pools treated by salt electrolysis.
- The pump body and the prefilter are made from fibreglass reinforced polypropylene.
- Single phase pumps are fitted with P2 type capacitors,
- The BWT Eurostar II pump runs very quietly.
- BWT Eurostar II and Eurostar pumps have the same centre-tocentre distances and all parts are compatible.
- Now even safer: thanks to the impeller's original design, the motor shaft never comes into contact with the pool water. This means that stray current will never leak into the pool.
- Delivered with a tool for opening the prefilter.





CODE	MODEL	Flowrate m³/h at 10 mWC	max current (A)	P1 kW	P2 kW	Voltage	Acoustic pressure at 1m (dBA)
BWTP21	Eurostar II 50-M	7	2.60	0.50	0.30	1 ph	57.2
BWTP22	Eurostar II 75-M	9	3.20	0.65	0.45	1 ph	58.8
BWTP23	Eurostar II 100-M	12	4.70	0.97	0.65	1 ph	62.7
BWTP24	Eurostar II 150-M	15	5.20	1.10	0.75	1 ph	57.9
BWTP25	Eurostar II 200-M	18	6.70	1.40	1.00	1 ph	61.7
BWTP26	Eurostar II 50-M	9	1.25	0.63	0.45	3 ph	58.6
BWTP27	Eurostar II 75-M	12	1.75	0.82	0.65	3 ph	62.3
BWTP28	Eurostar II 100-M	15	1.95	1.00	0.75	3 ph	58.8
BWTP29	Eurostar II 150-M	18	2.25	1.26	1.00	3 ph	58.9





BRT JET STREAM

JET STREAM SONSUZ HAVUZ

Technical data

- The massager is made of top quality ABS plastic.
- Chemicals resistant to UV radiation and harmful effects
- A pneumatic button is built into the front panel, for pump activation and inflow regulation bubble bath mood
- Massage is suitable for all types of pools
- Set also includes a flange with gasket
- Pneumatic box must be controlled dry loaded place above the water table a distance of not more than 4 meter from key, front device placed on disk.
- Note that the gap between the surfaces was water and the axis of the propeller nozzle was approximately 30 cm (FIGURE 1)
- Drive connections Ø 75 mm and a suction pipe
- Installs 90 mm vertically so that the driver was in the upper part, lower suction when wiring (FIGURE 1)

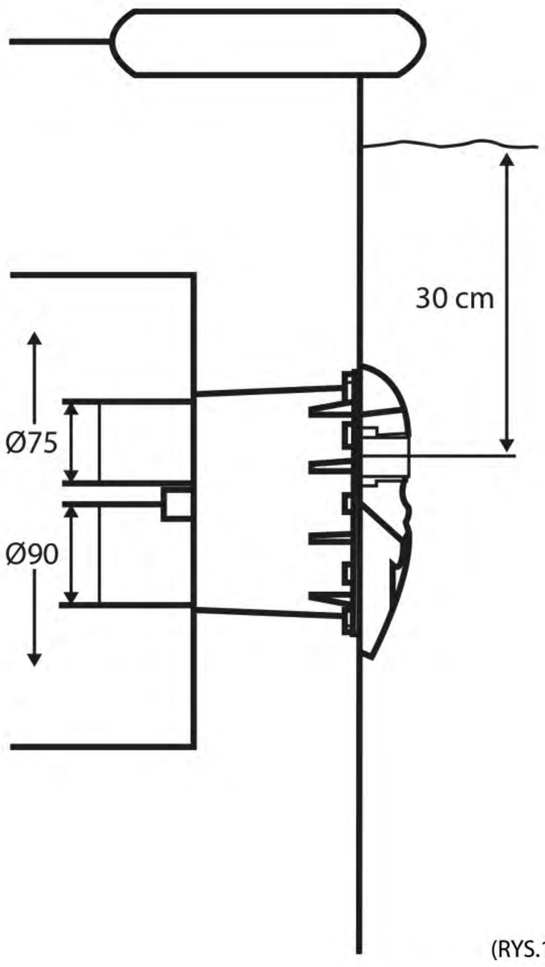

(RYS.1)

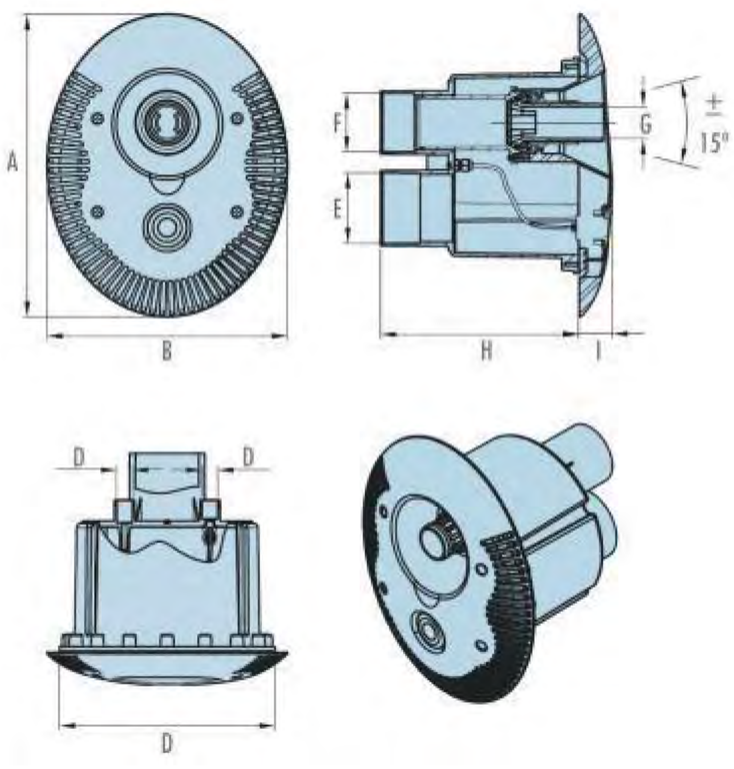

CODE	PERFORMANCE	POWER	PRICE
BRTJS-01	70 m3/h	2,2	€
BRTJS-02	80 m3/h	2,9	€
BRTJS-03	95 m3/h	4,0	€
BRTJS-04	41 m3/h	1,1	€
BRTJS-05	55 m3/h	1,5	€
BRTJS-06	65 m3/h	2,2	€
BRTJS-07	75 m3/h	2,9	€

A	B	D	E	F	G	H	I
390	310	Ø20,5	Ø90	Ø75	41	255	43,5

POLYESTER PUMP TABLE
POLYESTER POMPA SEHPASI

KOD CODE	MODEL MODEL	AĞIRLIK WEIGHT	EBAT SIZE
-	Simple Polyester Pump Table	2,35 Kg	0,20 × 0,55 × 0,34
-	Duble Polyester Pump Table	4,70 Kg	0,20 × 1,02 × 0,34
-	Triple Polyester Pump Table	12,00 Kg	0,90 × 0,60 × 0,26
-	Five Polyester Pump Table	14,50 Kg	1,80 × 0,80 × 0,26



PLASTIC PUMP TABLE
PLASTİK POMPA SEHPASI

KOD CODE	MODEL MODEL	AĞIRLIK WEIGHT	EBAT SIZE
-	Simple Plastic Pump Table	-	-

A	B	C
415	255	205



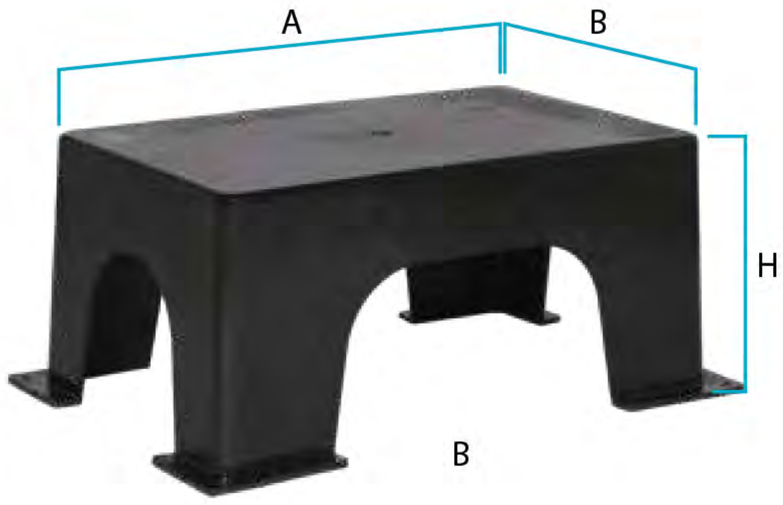





KOD CODE	MODEL MODEL	AĞIRLIK WEIGHT	EBAT SIZE
-	Combo 300 Plastic Pump Stand	-	-
-	Combo 400 Plastic Pump Stand	-	-
-	Combo 500 Plastic Pump Stand	-	-
-	Combo 620 Plastic Pump Stand	-	-

STAINLESS PUMP TABLE
PASLANMAZ POMPA SEHPASI

KOD CODE	MODEL MODEL	AĞIRLIK WEIGHT	EBAT SIZE
-	Steel Stainless Pump Table	3,7 Kg	0,415×0,255×0,205



PUMP TABLES

RELAX
CLEAN & SAFE



2

SAND FILTERS



SWIN SERIES PREMIUM

- PLASTIC DESIGN
- GOOD PERFORMANCE
- SIDE VALVE
- MORE COLOR OPTIONS



SWIN SERIES ECO

- SWIN ECO SERIES
- PLASTIC DESIGN
- ECONOMY
- SIDE VALVE
- MORE COLOR OPTIONS



ORION SERIES PREMIUM

- PLASTIC DESIGN
- GOOD PERFORMANCE
- TOP VALVE
- MORE COLOR OPTIONS



ORION SERIES ECO

- ORION ECO SERIES
- PLASTIC DESIGN
- ECO MODEL
- TOP VALVE
- MORE COLOR OPTIONS



OLIVIA SERIES

- POLYESTER DESIGN
- PRIVATE TYPE
- MORE COLOR OPTIONS



VITA SERIES

- POLYESTER DESIGN
- COMMERCIAL TYPE
- MORE COLOR OPTIONS



PURE SERIES

- POLYESTER DESIGN



JOURNEY SERIES DIN NORM

- POLYESTER DESIGN
- SIDE VALVE
- DIN NORM



COMBO SET

- PERFECT DESIGN
- GOOD PERFORMANCE
- ECONOMY
- PLASTIC FORM
- FOR ALL TYPE POOLS

BRT SAND FILTERS

FOR SWIMMING POOL

Low pressure injection technology

- Low pressure injection moulding.
- Resin Transfer Moulding.

High technology

- High quality finish.
- Regular composite thickness.
- Perfectly smooth inner and outer surfaces.

Controlled automated production

- Irreproachable reproducibility.

Pressure resistance

- Maximum operating pressure (according to NF EN 16713–1): 2 bar.
- RTM filter: a filter designed with

Professionals in mind

- Wide opening, Ø 250 mm, no nuts or bolts.
- Wide drain Ø 50 mm with strainer that can be unscrewed from the outside.
- Internal components are screwed together so dismantling is easy.

Guarantee

- 2 year guarantee on the filter shell.
- In the event of a replacement under guarantee, the cost of labour is also covered.



Plastic & Polyester Sand Filters

select your colors



PREMIUM

SWIN SERIES SIDE VALVE YANDAN VANALI

PLASTIC SAND FILTER PLASTİK KUM FİLTRE

Technology

Plastic sand filter on monoblock polyethylene body.
Side valve connection.

Note

6-way valve for 1050 mm Plastic Filter
is not included.





RECOMENDED
6 way valve
PAGE – <





3,5 BAR TEST PRESSURE

Made in TÜRKİYE

2 YEARS WARRANTY

SELECT COLORS

KOD CODE	MODEL MODEL	DEBİ FLOW	BAĞLANTI CONNECT	GİRİŞ INLET OUTLET	AĞIRLIK WEIGHT	EBAT SIZE
-	Swin Series Premium 300 Filter	3,5 m^3	D 50	Ø 300 mm	-	-
-	Swin Series Premium 400 Filter	6,5 m^3	D 50	Ø 400 mm	11 Kg	-
-	Swin Series Premium 500 Filter	10 m^3	D 50	Ø 500 mm	13 Kg	-
-	Swin Series Premium 620 Filter	15,1 m^3	D 50	Ø 620 mm	21 Kg	-
-	Swin Series Premium 760 Filter	22,65 m^3	D 50	Ø 760 mm	32 Kg	-
-	Swin Series Premium 920 Filter	33,2 m^3	D 50	Ø 920 mm	45 Kg	-



Filter Ø	Flow m^3/h	Connect (*)	F.A. (m^2)	Weight (Kg)	Total Sand Kg	H (mm)
300	3,5	D 50	0,07	-	60	570
400	6,5	D 50	0,13	11	80	630
500	10	D 50	0,20	13	90	690
620	15,1	D 50	0,302	21	140	850
760	22,65	D 50	0,453	32	305	-
920	33,2	D 50	0,664	45	530	1250

ECO

SWIN SERIES SIDE VALVE YANDAN VANALI

PLASTIC SAND FILTER PLASTİK KUM FİLTRE

Technology

Plastic sand filter on monoblock polyethylene body.
Side valve connection.

Note

6-way valve for 1050 mm Plastic Filter
is not included.







RECOMENDED
6 way valve
PAGE – <



3,5 BAR TEST PRESSURE

Made in TÜRKİYE

2 YEARS WARRANTY

SELECT COLORS

KOD CODE	MODEL MODEL	DEBİ FLOW	BAĞLANTI CONNECT	GİRİŞ INLET OUTLET	AĞIRLIK WEIGHT	EBAT SIZE
-	Swin Series Eco 300 Filter	3,5 m^3	D 50	Ø 300 mm	-	-
-	Swin Series Eco 400 Filter	6,5 m^3	D 50	Ø 400 mm	11 Kg	-
-	Swin Series Eco 500 Filter	10 m^3	D 50	Ø 500 mm	13 Kg	-
-	Swin Series Eco 620 Filter	15,1 m^3	D 50	Ø 620 mm	21 Kg	-
-	Swin Series Eco 760 Filter	22,65 m^3	D 50	Ø 760 mm	32 Kg	-
-	Swin Series Eco 920 Filter	33,2 m^3	D 50	Ø 920 mm	45 Kg	-

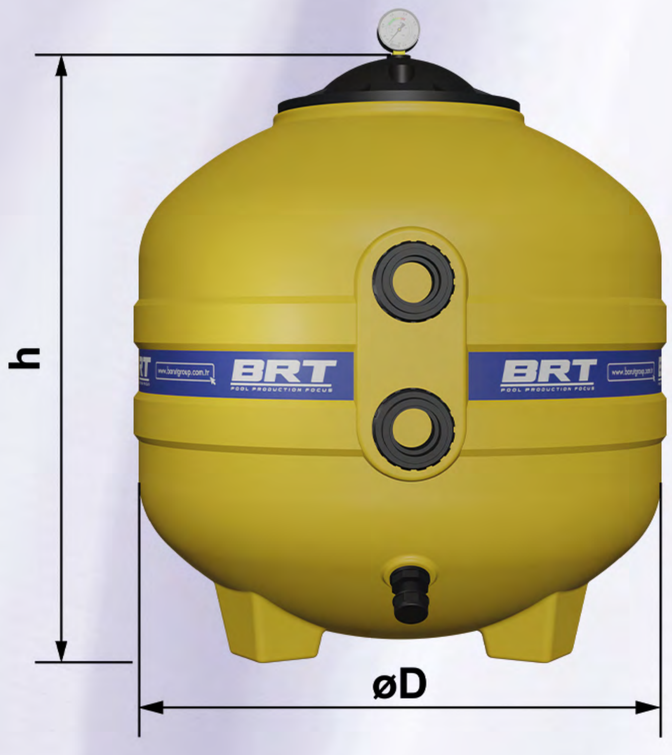

Filter Ø	Flow m^3/h	Connect (*)	F.A. (m^2)	Weight (Kg)	Total Sand Kg	H (mm)
300	3,5	D 50	0,07	-	60	450
400	6,5	D 50	0,13	11	80	510
500	10	D 50	0,20	13	90	610
620	15,1	D 50	0,302	21	140	705
760	22,65	D 50	0,453	32	305	-
920	33,2	D 50	0,664	45	530	1070

PREMIUM

ORION SERIES TOP VALVE ÜSTTEN VANALI

PLASTIC SAND FILTER PLASTİK KUM FİLTRE

Technical Data

1''1/2 or 2'' valve (not mounted, delivered in a separate package),
TOP lid, not assembled, with necessary o-rings,
Pressure gauge to be mounted on the valve,
Internal pipe work diameter, 50 or 63 mm,
Lower drain, diameter 50 mm,
Strainer on the lower drain, may be unscrewed from the exterior,
A 38 mm hose tail may be fitted onto the lower drain to allow connection of a drainage hose,
Bar laterals, 6 branch manifold,
Easy to assemble,
Simple to maintain.



TOP SIDE MULTI PORT VALVE



Made in TÜRKİYE

2 YEARS WARRANTY

SELECT COLORS

KOD CODE	MODEL MODEL	DEBİ FLOW	BAĞLANTI CONNECT	GİRİŞ INLET OUTLET	AĞIRLIK WEIGHT	EBAT SIZE
-	Orion Series Premium 300 Filter	3,5 m^3	D 50	Ø 300 mm	-	-
-	Orion Series Premium 400 Filter	6,5 m^3	D 50	Ø 400 mm	11 Kg	-
-	Orion Series Premium 500 Filter	10 m^3	D 50	Ø 500 mm	13 Kg	-
-	Orion Series Premium 620 Filter	15,1 m^3	D 50	Ø 620 mm	21 Kg	-
-	Orion Series Premium 760 Filter	22,65 m^3	D 50	Ø 760 mm	32 Kg	-
-	Orion Series Premium 920 Filter	33,2 m^3	D 50	Ø 920 mm	45 Kg	-



ECO

ORION SERIES TOP VALVE ÜSTTEN VANALI

PLASTIC SAND FILTER PLASTİK KUM FİLTRE

Technical Data

1''1/2 or 2'' valve (not mounted, delivered in a separate package),
TOP lid, not assembled, with necessary o-rings,
Pressure gauge to be mounted on the valve,
Internal pipe work diameter, 50 or 63 mm,
Lower drain, diameter 50 mm,
Strainer on the lower drain, may be unscrewed from the exterior,
A 38 mm hose tail may be fitted onto the lower drain to allow connection of a drainage hose,
Bar laterals, 6 branch manifold,
Easy to assemble,
Simple to maintain.



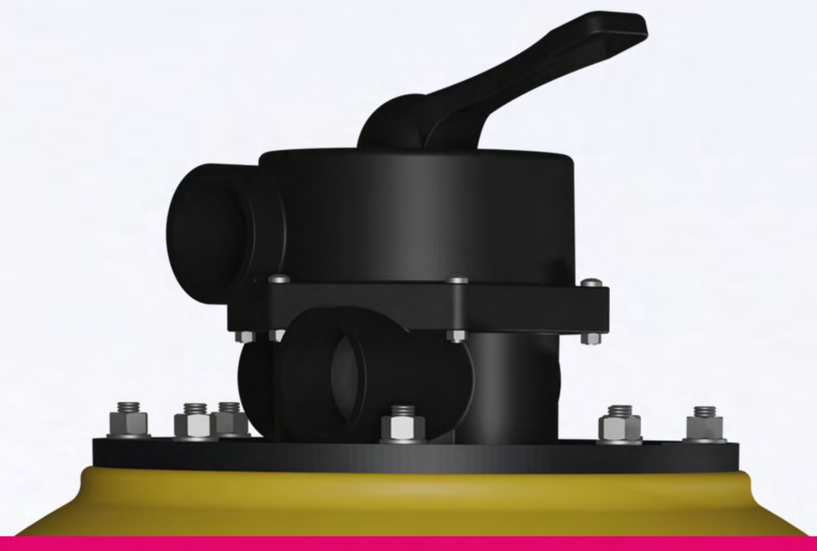

TOP SIDE MULTI PORT VALVE

Made in TÜRKİYE

2 YEARS WARRANTY

SELECT COLORS

KOD CODE	MODEL MODEL	DEBİ FLOW	BAĞLANTI CONNECT	GİRİŞ INLET OUTLET	AĞIRLIK WEIGHT	EBAT SIZE
-	Orion Series Eco 300 Filter	3,5 m^3	D 50	Ø 300 mm	-	-
-	Orion Series Eco 400 Filter	6,5 m^3	D 50	Ø 400 mm	11 Kg	-
-	Orion Series Eco 500 Filter	10 m^3	D 50	Ø 500 mm	13 Kg	-
-	Orion Series Eco 620 Filter	15,1 m^3	D 50	Ø 620 mm	21 Kg	-
-	Orion Series Eco 760 Filter	22,65 m^3	D 50	Ø 760 mm	32 Kg	-
-	Orion Series Eco 920 Filter	33,2 m^3	D 50	Ø 920 mm	45 Kg	-



OLIVIA PRIVATE TYPE ÖZEL TİP

POLYESTER SAND FILTER POLYESTER KUM FİLTRESİ

Description

BRT Pool sand filter is produced with high chemical resistance isophthalic polyester resin.
Optionally as it can be produced in different colors
Optionally as it can be produced in transparent lid upon request
Can be used for heated pools
Can be installed outdoors

RECOMENDED
6 way valve
PAGE <

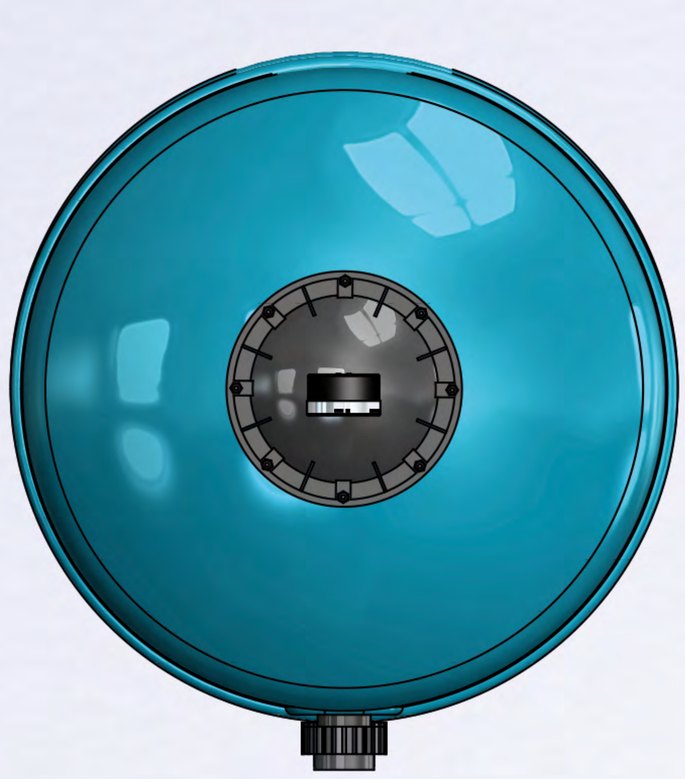





Made in TÜRKİYE

2 YEARS WARRANTY

SELECT COLORS

KOD CODE	MODEL MODEL	BAĞLANTI CONNECT	GİRİŞ INLET OUTLET	DEBİ FLOW	AĞIRLIK WEIGHT
-	Olivia Series 350 Polyester Filter	1"1/2	Ø 350 mm	6 m^3	11 Kg
-	Olivia Series 450 Polyester Filter	1"1/2	Ø 450 mm	8 m^3	13 Kg
-	Olivia Series 500 Polyester Filter	1"1/2	Ø 500 mm	10 m^3	15 Kg
-	Olivia Series 650 Polyester Filter	1"1/2	Ø 650 mm	15 m^3	20 Kg
-	Olivia Series 760 Polyester Filter	2"	Ø 760 mm	22 m^3	31 Kg
-	Olivia Series 800 Polyester Filter	2"	Ø 800 mm	24 m^3	34 Kg
-	Olivia Series 950 Polyester Filter	2"	Ø 950 mm	30 m^3	40 Kg

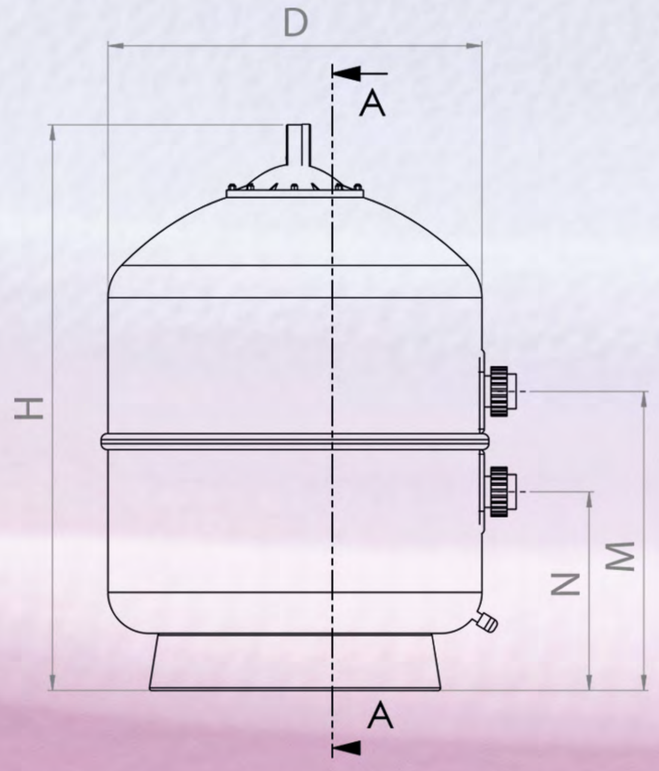

Flow m^3/h	Connect (*)	F.A. (m^2)	Weight (Kg)	Total Sand Kg	N (mm)	M (mm)	H (mm)	D (mm)
6	1" 1/2	0,12	11	60	330	450	660	350
8	1" 1/2	0,14	13	80	290	410	700	450
10	1" 1/2	0,20	15	90	300	420	800	500
15	1" 1/2	0,30	20	140	320	440	900	650
22	2"	0,42	31	305	360	560	1030	760
24	2"	0,46	34	325	380	580	1080	800
30	2"	0,60	40	530	380	580	1080	950



Ultra High Filtration Performance

VITA COMMERCIAL TYPE TİCARİ TİP
POLYESTER SAND FILTER POLYESTER KUM FİLTRE

Description

BRT Sand filters Made by Reinforced Laminated Polyester.
Filter Top cover 400 mm and all filters including pressure gauge, and purge.
Filtration Volacity is 50 m3/h/m2.

Max working temparature 40 o C (instant).
Max working pressure 2,0 kg / cm2 and test pressure is 4,0 kg / cm2. Filter body has 2 years guarantee.

RECOMENDED
6 way valve
PAGE <





Made in TÜRKİYE | 2 YEARS WARRANTY | SELECT COLORS



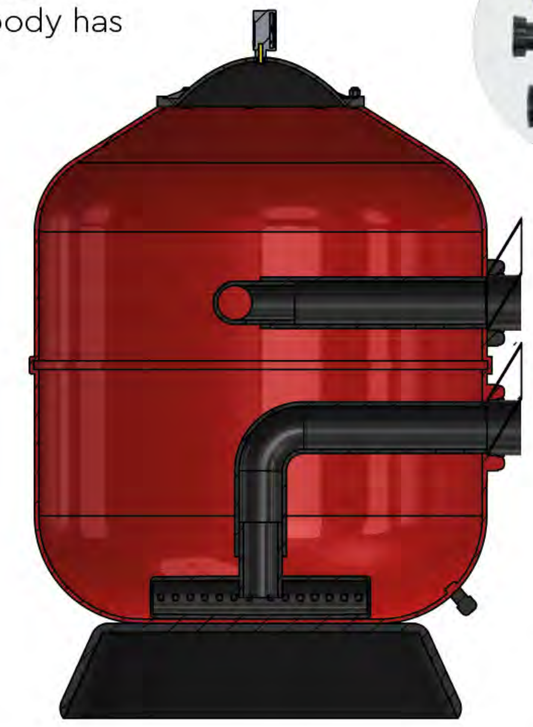

KOD CODE	MODEL MODEL	BAĞLANTI CONNECT	GİRİŞ INLET OUTLET	DEBİ FLOW	AĞIRLIK WEIGHT
-	Vita Series 1050 Commercial Polyester Filter	2,5"	Ø 1050 mm	43 m^3	97 Kg
-	Vita Series 1250M Commercial Polyester Filter	3"	Ø 1250 mm	56 m^3	125 Kg
-	Vita Series 1250 Commercial Polyester Filter	3"	Ø 1250 mm	61 m^3	130 Kg
-	Vita Series 1400 Commercial Polyester Filter	4"	Ø 1400 mm	77 m^3	152 Kg
-	Vita Series 1600M Commercial Polyester Filter	4"	Ø 1600 mm	100 m^3	185 Kg
-	Vita Series 1600 Commercial Polyester Filter	6"	Ø 1600 mm	100 m^3	195 Kg
-	Vita Series 1800 Commercial Polyester Filter	6"	Ø 1800 mm	127 m^3	257 Kg
-	Vita Series 2000M Commercial Polyester Filter	6"	Ø 2000 mm	150 m^3	360 Kg
-	Vita Series 2000 Commercial Polyester Filter	6"	Ø 2000 mm	157 m^3	400 Kg
-	Vita Series 2250 Commercial Polyester Filter	7"	Ø 2250 mm	210 m^3	-
-	Vita Series 2500 Commercial Polyester Filter	7"	Ø 2500 mm	-	-

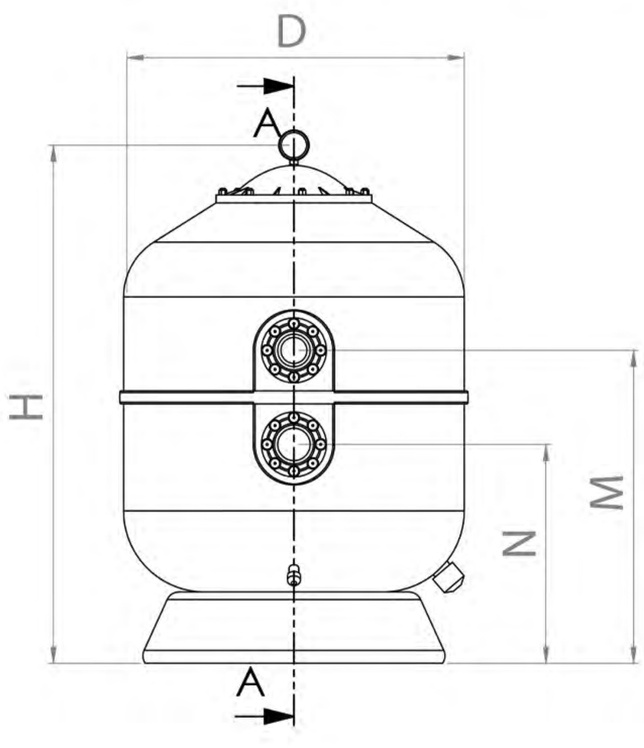

Flow m^3/h	Connect (*)	F.A. (m^2)	Weight (Kg)	Total Sand Kg	N (mm)	M (mm)	H (mm)	D (mm)
43	2,5"	0,86	97	890	430	930	1500	1050
56	3"	1,12	125	1200	560	900	1550	1250
61	3"	1,22	130	1375	400	1125	1650	1250
77	4"	1,54	152	1800	650	980	1630	1400
100	4"	2,00	185	2725	900	1320	1880	1600
100	6"	2,00	195	3050	460	1250	1880	1600
127	6"	2,54	257	3650	460	1250	1900	1800
150	6"	3,00	360	4950	820	1340	1980	2000
157	6"	3,14	400	5350	820	1340	2080	2000
210	7"	4,20		7550	820	1340	2360	2200

PURE SERIES PURE SERİSİ

POLYESTER SAND FILTER POLYESTER KUM FİLTRESİ

Description

BRT Pool sand filter is produced with high chemical resistance isophthalic polyester resin.
Optionally as it can be produced in different colors
Optionally as it can be produced in transparent lid upon request
Can be used for heated pools
Can be installed outdoors

RECOMENDED
6 way valve
PAGE <





Made in TÜRKİYE

2 YEARS WARRANTY

SELECT COLORS



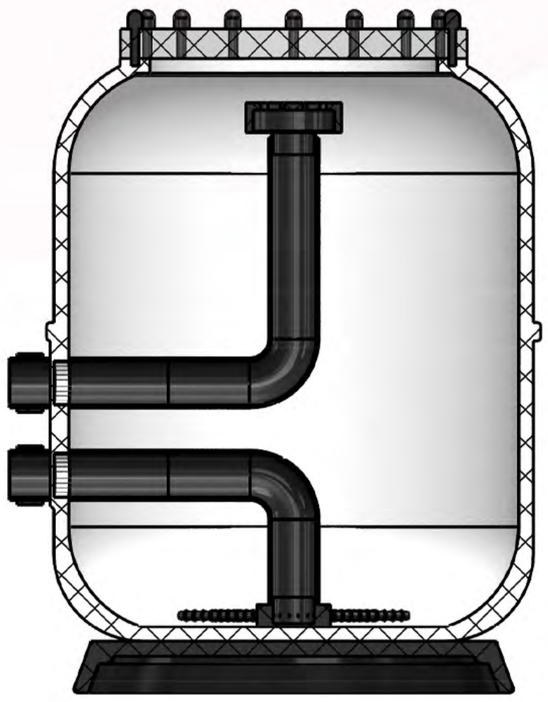



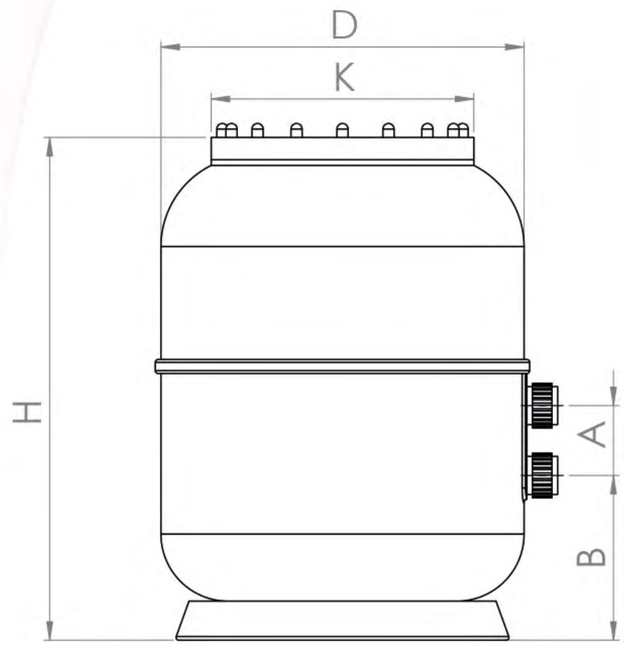

Flow m^3/h	Connect (*)	F.A. (m^2)	Weight (Kg)	Total Sand Kg	A (mm)	B (mm)	H (mm)	D (mm)	K (mm)
10	1" 1/2	0,2	15	120	125	295	800	500	420
15	1" 1/2	0,3	20	180	125	295	900	650	470
22	2"	0,42	31	315	140	360	1030	760	470
30	2"	0,6	40	450	140	360	1080	950	470

KOD CODE	MODEL MODEL	BAĞLANTI CONNECT	GİRİŞ INLET OUTLET	DEBİ FLOW	AĞIRLIK WEIGHT
-	Pure Series 500 Polyester Filter	1" 1/2	Ø 500 mm	10 m^3	15 Kg
-	Pure Series 650 Polyester Filter	1" 1/2	Ø 650 mm	15 m^3	20 Kg
-	Pure Series 800 Polyester Filter	2"	Ø 800 mm	22 m^3	31 Kg
-	Pure Series 950 Polyester Filter	2"	Ø 950 mm	30 m^3	40 Kg

Ultra High Filtration Performance

LORA SERIES LORA SERİSİ
POLYESTER SAND FILTER POLYESTER KUM FİLTRE

Description

BRT Pool sand filter is produced with high chemical resistance isophthalic polyester resin.
Optionally as it can be produced in different colors
Optionally as it can be produced in transparent lid upon request
Can be used for heated pools
Can be installed outdoors



RECOMENDED
6 way valve
PAGE <



Made in TÜRKİYE | 2 YEARS WARRANTY | SELECT COLORS

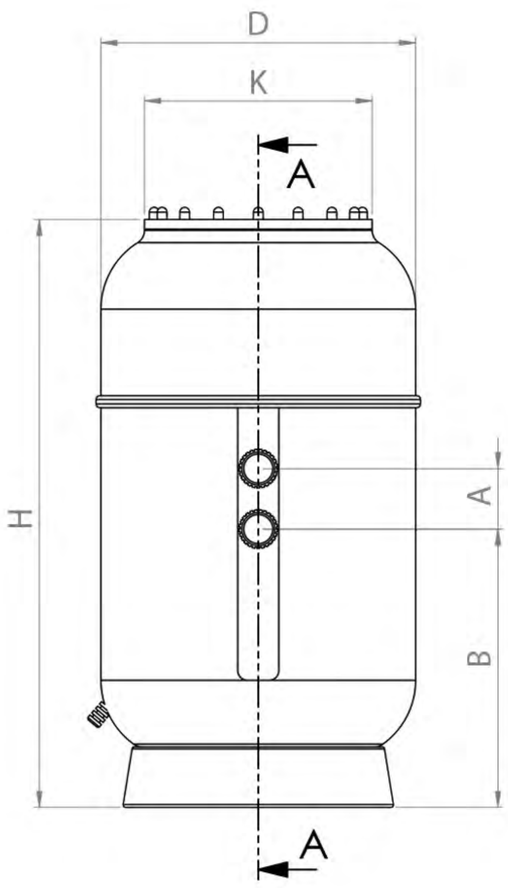





Flow m^3/h	Connect (*)	F.A. (m^2)	Weight (Kg)	Total Sand Kg	A (mm)	B (mm)	H (mm)	D (mm)	K (mm)
15	1" 1/2	0,32	33	250	125	450	1070	650	470
22	2"	0,50	45	504	140	500	1200	760	470
30	2"	0,60	55	620	140	500	1200	950	470

KOD CODE	MODEL MODEL	BAĞLANTI CONNECT	GİRİŞ INLET OUTLET	DEBİ FLOW	AĞIRLIK WEIGHT
-	Lora Series 650 Polyester Filter	1" 1/2	Ø 650 mm	15 m^3	33 Kg
-	Lora Series 800 Polyester Filter	2"	Ø 800 mm	22 m^3	45 Kg
-	Lora Series 950 Polyester Filter	2"	Ø 950 mm	30 m^3	55 Kg

AQUA SERIES AQUA SERİSİ

POLYESTER SAND FILTER POLYESTER KUM FİLTRESİ

Description

BRT Pool sand filter is produced with high chemical resistance isophthalic polyester resin.
Optionally as it can be produced in different colors
Optionally as it can be produced in transparent lid upon request
Can be used for heated pools
Can be installed outdoors

RECOMENDED
6 way valve
PAGE <





Made in TÜRKİYE

2 YEARS WARRANTY

SELECT COLORS

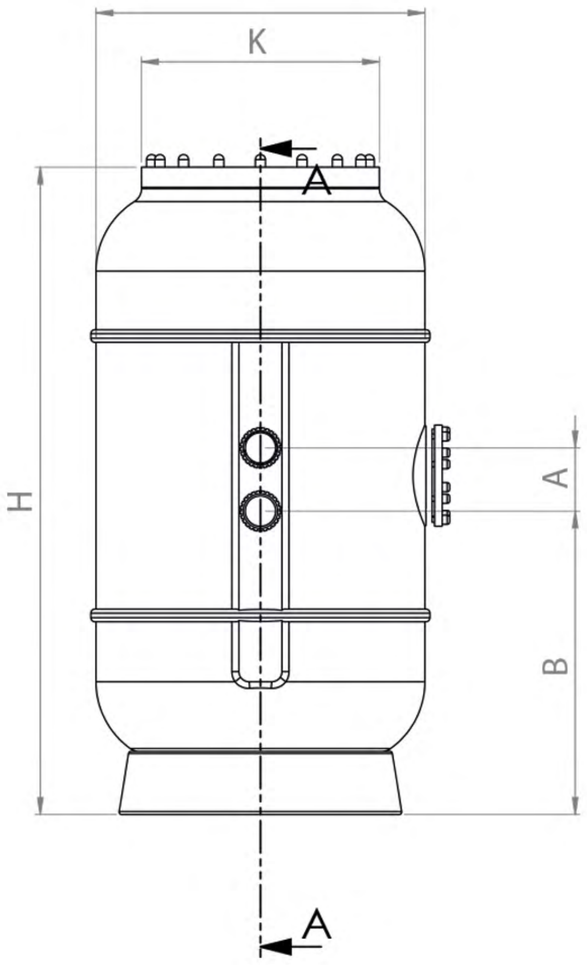

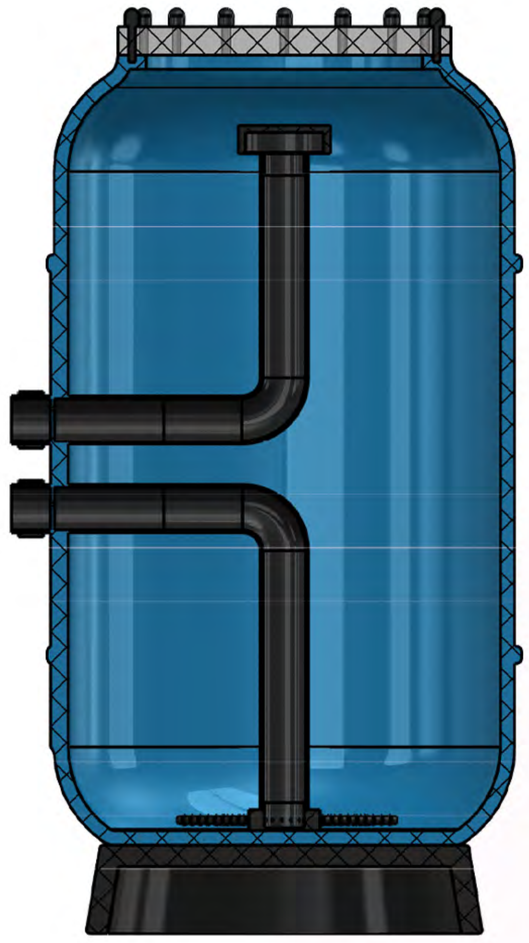



Flow m^3/h	Connect (*)	F.A. (m^2)	Weight (Kg)	Total Sand Kg	A (mm)	B (mm)	H (mm)	D (mm)	K (mm)
15	1" 1/2	0,32	48	250	125	600	1280	650	470
22	2"	0,50	60	600	140	650	1350	760	470
30	2"	0,60	70	720	140	650	1350	950	470

KOD CODE	MODEL MODEL	BAĞLANTI CONNECT	GİRİŞ INLET OUTLET	DEBİ FLOW	AĞIRLIK WEIGHT
-	Aqua Series 650 Polyester Filter	1" 1/2	Ø 650 mm	15 m^3	48 Kg
-	Aqua Series 800 Polyester Filter	2"	Ø 800 mm	22 m^3	60 Kg
-	Aqua Series 950 Polyester Filter	2"	Ø 950 mm	30 m^3	70 Kg

Ultra High Filtration Performance



Made in TÜRKİYE

2 YEARS WARRANTY

SELECT COLORS

JOURNEY DIN NORM DIN NORM

POLYESTER SAND FILTER POLYESTER KUM FİLTRE

Description

BRT Din Norm pool sand filter is produced with high chemical resistance isophthalic polyester resin. With side valve connection. Price includes multiport valve, manometer and air valve. Sand is not included.

- Connection diameter : Ø 50 mm
- Test pressure : 4 bar.
- Operating pressure : 0,5–1,5 bar.

Filter retention capacity reduction of turbidity, throughput rate

KOD CODE	MODEL MODEL	BAĞLANTI CONNECT	GİRİŞ INLET OUTLET	DEBİ FLOW	AĞIRLIK WEIGHT
-	Journey Series 650 Din Norm Polyester	1/1/2"	Ø 650 mm	50 m^3	11 Kg
-	Journey Series 820 Din Norm Polyester	2"	Ø 820 mm	50 m^3	13 Kg
-	Journey Series 950 Din Norm Polyester	2,5"	Ø 950 mm	50 m^3	15 Kg
-	Journey Series 1050 Din Norm Polyester	-	Ø 1050 mm	-	-
-	Journey Series 1250 Din Norm Polyester	-	Ø 1250 mm	-	-
-	Journey Series 1400 Din Norm Polyester	-	Ø 1400 mm	-	-
-	Journey Series 1600 Din Norm Polyester	-	Ø 1600 mm	-	-
-	Journey Series 1800 Din Norm Polyester	-	Ø 1800 mm	-	-
-	Journey Series 2000 Din Norm Polyester	-	Ø 2000 mm	-	-

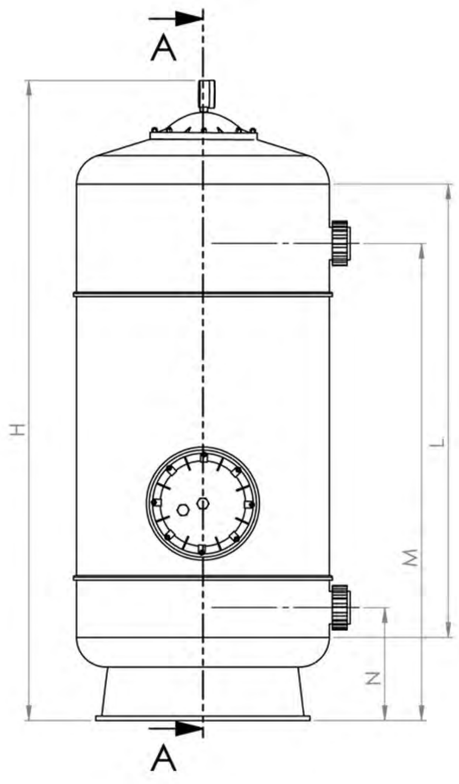



PLASTIC FILTERS & PUMPS + COMBO SET

SIDE VALVE

Sand Filter Combo with Pump Pressure

- Easy to use and maintain your pool
- Fully integrated sand filter, Pump Pressure Valve and Stand
- Never-rust, blow molded plastic tank construction





Made in TÜRKİYE

2 YEARS WARRANTY

SELECT COLORS

KOD CODE	MODEL MODEL	BAĞLANTI CONNECT	GİRİŞ INLET OUTLET	AĞIRLIK FLOW	EBAT WEIGHT
-	BRT 300 Plastic Filter & 0,50 HP Pump Set	D 50	Ø 300 mm	-	-
-	BRT 400 Plastic Filter & 0,75 HP Pump Set	D 50	Ø 400 mm	6,00 m^3	22,5 Kg
-	BRT 500 Plastic Filter & 0,75 HP Pump Set	D 50	Ø 500 mm	10,00 m^3	26,6 Kg
-	BRT 620 Plastic Filter & 1,00 HP Pump Set	D 50	Ø 620 mm	15,00 m^3	36,75 Kg

PLASTIC FILTERS & PUMPS + COMBO SET

TOP VALVE

Sand Filter Combo with Pump Pressure

- Easy to use and maintain your pool
- Fully integrated sand filter, Pump Pressure Valve and Stand
- Never-rust, blow molded plastic tank construction





Made in TÜRKİYE

2 YEARS WARRANTY

SELECT COLORS

KOD CODE	MODEL MODEL	BAĞLANTI CONNECT	GİRİŞ INLET OUTLET	AĞIRLIK FLOW	EBAT WEIGHT
-	BRT 300 Plastic Filter Top Valve & 0,50 HP Pump Set	D 50	Ø 300 mm	-	-
-	BRT 400 Plastic Filter Top Valve & 0,50 HP Pump Set	D 50	Ø 400 mm	6,00 m^3	22,5 Kg
-	BRT 500 Plastic Filter Top Valve & 0,75 HP Pump Set	D 50	Ø 500 mm	10,00 m^3	26,6 Kg
-	BRT 620 Plastic Filter Top Valve & 1,00 HP Pump Set	D 50	Ø 620 mm	15,00 m^3	36,75 Kg



GLASS MEDIA CAM MEDYA
FOR SAND FILTERS FİLTRELER İÇİN

Is a Filter Material

Glass media that reduces the number of backwashes with single layer, anti jamming feature and prevents organic reproduction.

Maximum lifetime. Low energy and chemical consumption. Ideal filtering ability. Negligible pressure loss. Maximum hygiene as it is an antiseptic material.

KOD CODE	PAKET PACKING	ÇAP DIA METER
-	25 Kg	0,6 – 1,2 mm
-	25 Kg	1,7 – 2,4 mm
-	25 Kg	4 – 6,7 mm

Specs

- Made of transparent pure window glass
- Three different granulometry are available
- A longer file span than quartz sand
- In limy water does not make up petrified
- Full cleaning feature in backwash
- %20 more filtration capacity than quartz sand
- Saving on backwashing and resultant water
- Energy saving and less usage chemical treatment

GLASS MEDIA

QUARTZ SAND KUVARS KUM
FOR SAND FILTERS FİLTRELER İÇİN

Is a Filter Material

Produced from natural material
Quartz sand washed and kiln-dried
High quality package



KOD CODE	PAKET PACKING	ÇAP DIA METER
-	25 Kg	0,5 -1,2 mm
-	25 Kg	1–3 mm
-	25 Kg	3–5 mm

6 WAY VALVE 6 YOLLU VANA

FOR SWIMMING POOL FILTERS HAVUZ FİLTRELERİ İÇİN

These are the valves that enable directing the operation of the filter

- Allow you to manage 6 functions with filtration, backwash, rinse, drain, recirculation, shutdown positions.
- Slip or threaded connections , side or top mounted options are available ABS material (cycolac).



KOD CODE	MODEL MODEL – THREADED INLET	BAĞLANTI CONNECTION	ÇIKIŞ THREADED OUTLET
-	Yandan BRT Side Mounted Multi Port Valve	Ø 1/2" mm	Alttan Lower
-	Yandan BRT Side Mounted Multi Port Valve	Ø 2" mm	Alttan Lower
-	Üstten BRT Top Mounted Multi Port Valve	Ø 1/2" mm	Alttan Lower
-	Üstten BRT Top Mounted Multi Port Valve	Ø 2" mm	Alttan Lower
-	Yandan PRAHER Side Mounted Multi Port Valve	Ø 1/2" mm	Alttan Lower
-	Yandan PRAHER Side Mounted Multi Port Valve	Ø 2" mm	Alttan Lower



3 FILTRATION BOX



FILTRATION BOX

- MINI, MIDI, MAXI SELECT OPTIONS
- GOOD PERFORMANCE
- ECONOMY
- POLYESTER DESIGN



EMPTY FILTRATION BOX

- POLYESTER DESIGN
- EMPTY TYPE
- ECO FRIENDLY



PUMP

PAGE –



FILTER

PAGE –



6 WAY

PAGE –



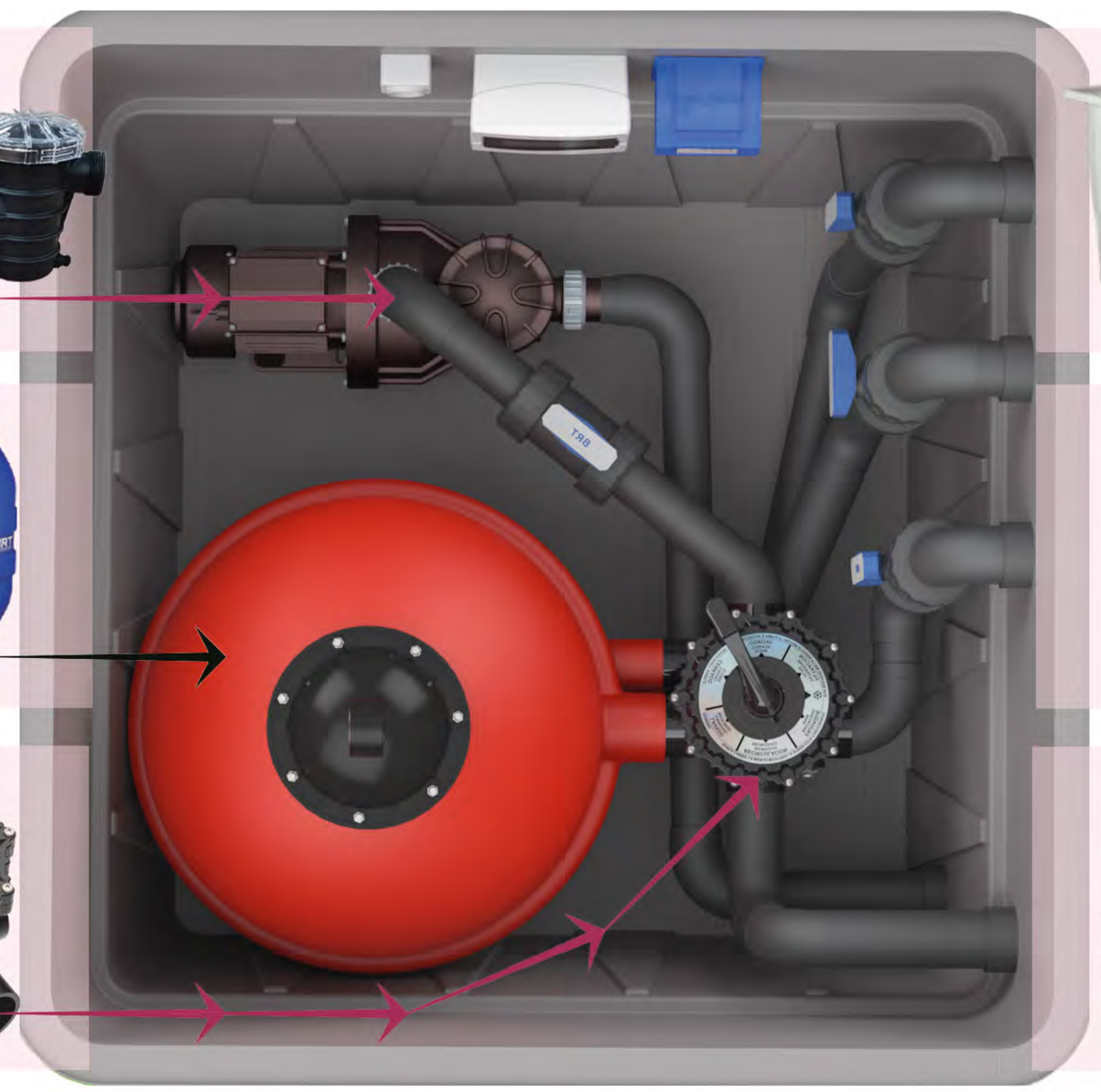

SKIMMER

PAGE –



NOZZLE

PAGE –



OTHER

PAGE –



THE BOX MACHINE

ALL IN ONE
FOR MACHINE ROOMS

Are you looking for the perfect protection and storage space for your pool equipment?

The practical and high-quality storage box offers

That's exactly what you need: protection, storage space and all in an attractive design look!

The highlight is: If you don't like the color – the surface can be flexibly painted!

The box has – doors with a lid and has a volume of – litres and is fully assembled: ready for immediate use!

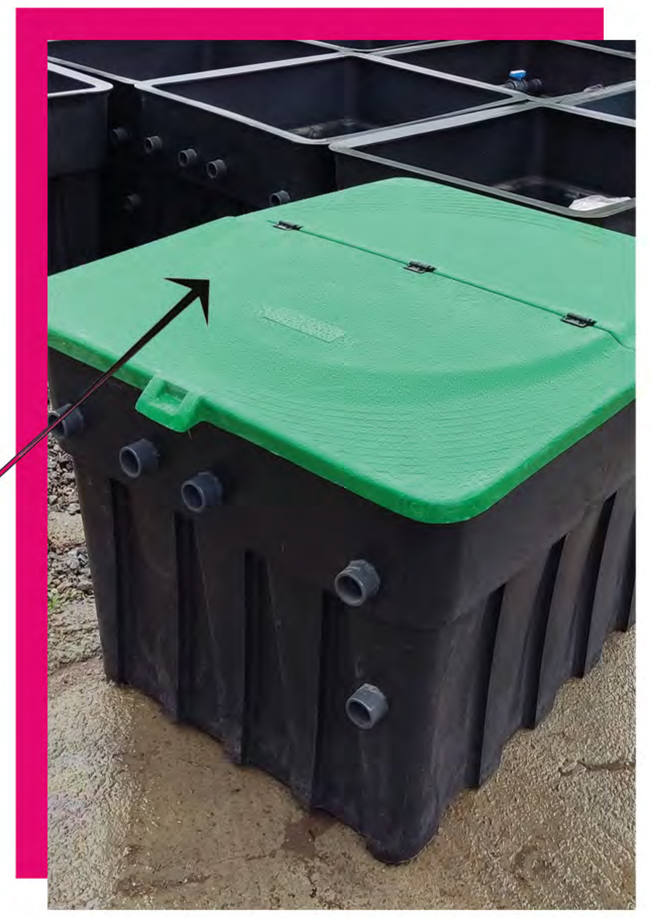



now with more color options





FILTRATION BOX
MACHINE ROOM

KOD CODE	MODEL MODEL
-	BRT Mini 300 Ready-to-Use w / 300 mm Filter + 0,35 HP Pump
-	BRT Mini 400 Ready-to-Use w / 400 mm Filter + 0,50 HP Pump
-	BRT Midi 500 Ready-to-Use w / 500 mm Filter + 0,75 HP Pump
-	BRT Midi 620 Ready-to-Use w / 620 mm Filter + 1,00 HP Pump
-	BRT Maxi XL 760 Ready-to-Use w / 760 mm Filter + 2 HP Pump
-	BRT Maxi XL 920 Ready-to-Use w / 920 mm Filter + 3 HP Pump

The pipe, multiway valve, electric box and transformer in the machine room and all parts are designed ready.

MINI
MIDI
MAXI



EMPTY FILTRATION BOX
MACHINE ROOM

KOD CODE	MODEL MODEL
-	BRT Mini Filtration Box Plastic
-	BRT Midi Filtration Box Plastic
-	BRT Mini Filtration Box Polyester
-	BRT Midi Filtration Box Polyester
-	BRT Maxi Filtration Box Polyester
-	BRT Maxi XL Filtration Box Polyester

4

ACCESSORIES

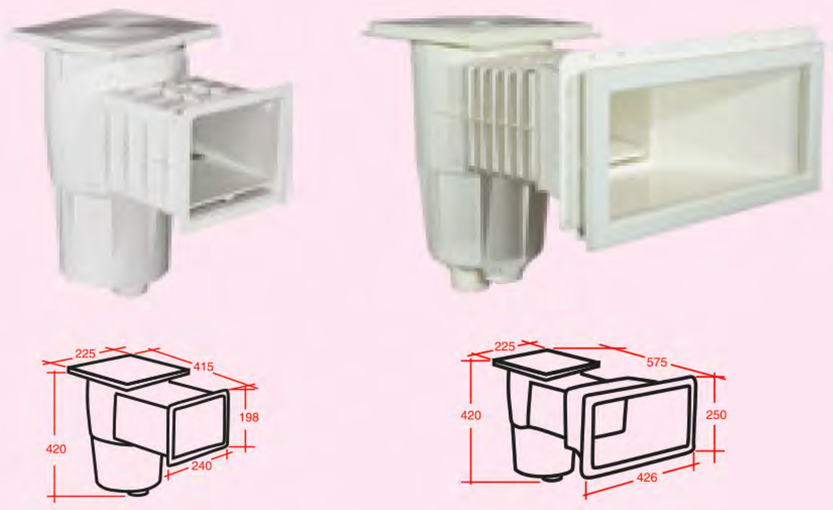

SKIMMER

- PERFECT DESIGN
- GOOD PERFORMANCE
- ECONOMY
- UV RESISTANT



NOZZLE & VACUUM

- PERFECT DESIGN
- GOOD PERFORMANCE
- ECONOMY
- UV RESISTANT



LED LIGHTS

- PERFECT DESIGN
- GOOD PERFORMANCE
- ECONOMY



RGB CONTROL PANEL

- PERFECT DESIGN
- GOOD PERFORMANCE
- ECONOMY

Made in Turkey, skimmers incorporate the latest technological innovations, quality and reliability are guaranteed. The range comprises 4 versions: liner pools, traditional reinforced concrete pools, panel pools, polyester shell pools.

* Made of UV resistant, pool-grade ABS,
* Self-adhesive elastomer seals,
* Stainless steel screws, suited to every pool type,
* Protective, adhesive worksite covers,
* Available in a range of colours,
* Made in Turkey.

A single screw type

All skimmer screws are the same, whatever the pool type, and are made of A4 stainless steel; it is easy to keep a stock on hand to satisfy after sales needs.

Self-adhesive seals

Masonry, liner, panel type pool fittings, are delivered with 2 selfadhesive elastomer seals, very easy to install and resistant to the action of pool chemicals.

Delivered in boxes of 2

By packing SL-119 (liner) and SB-118 (concrete) skimmers in boxes of two, the price of the skimmers is reduced by 10 %.

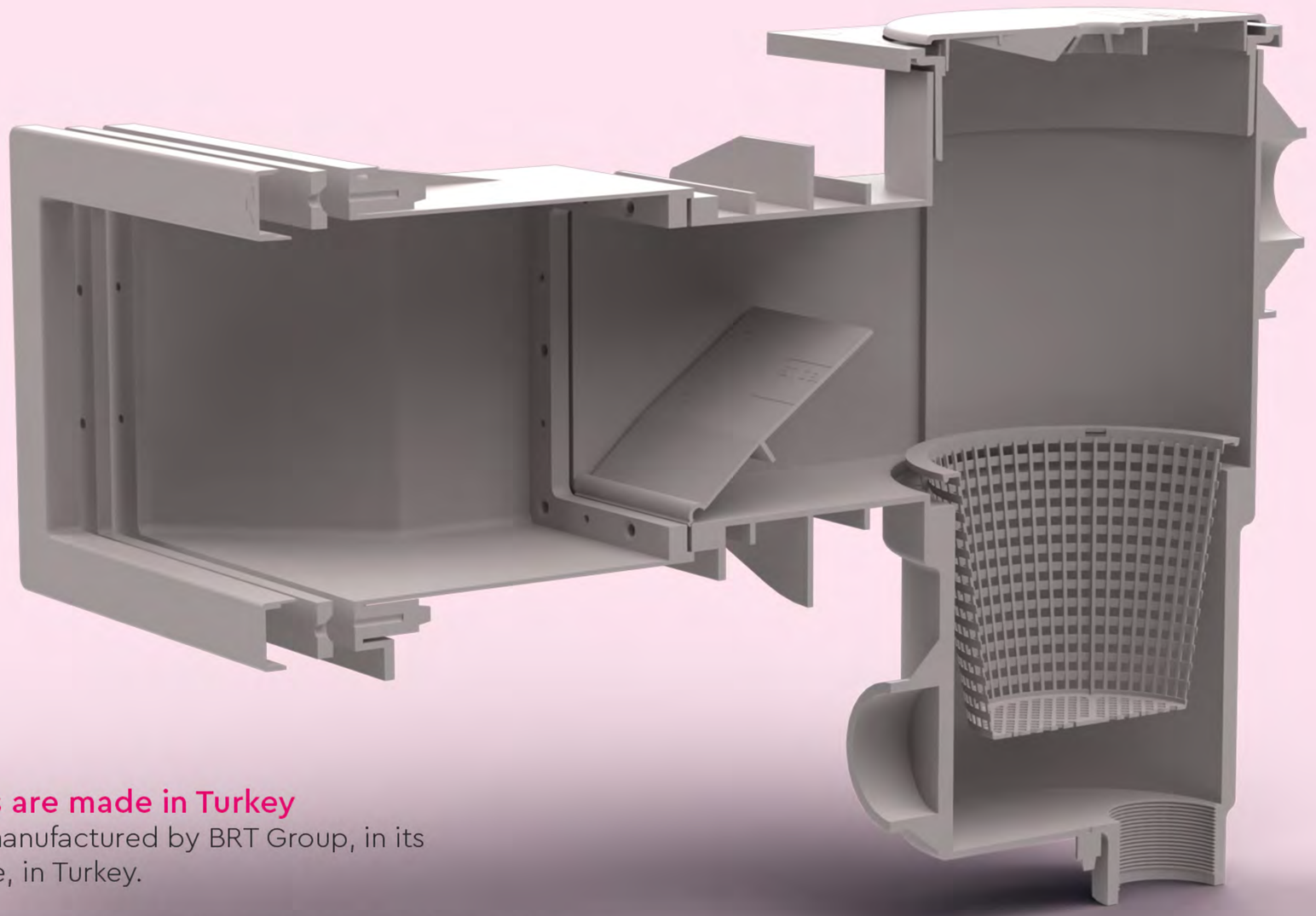

Our skimmers are made in Turkey

Skimmers are manufactured by BRT Group, in its factory in Duzce, in Turkey.

ABS gives skimmers a shiny, bright white finish (the shade of white is colour matched to BRT Group's range of liners and waterproofing membranes) that is stable over time thanks to its anti-UV treatment, and resistant to the action of pool chemicals under normal operating conditions. The skimmer body is always the same, irrespective of the skimmer version (concrete, liner, etc.).

In the event that a conventional concrete pool equipped with skimmers begins to leak, a liner or 1.50 mm reinforced membrane can easily be fitted. All that is needed are the flange, seals and screws necessary to transform your Concrete skimmer into a Liner skimmer.

Choice and harmony throughout the range!

Skimmers are available in 6 colours as part of the Color range: Light blue, Dark blue, Beige, Grey, Anthracite grey and Black.

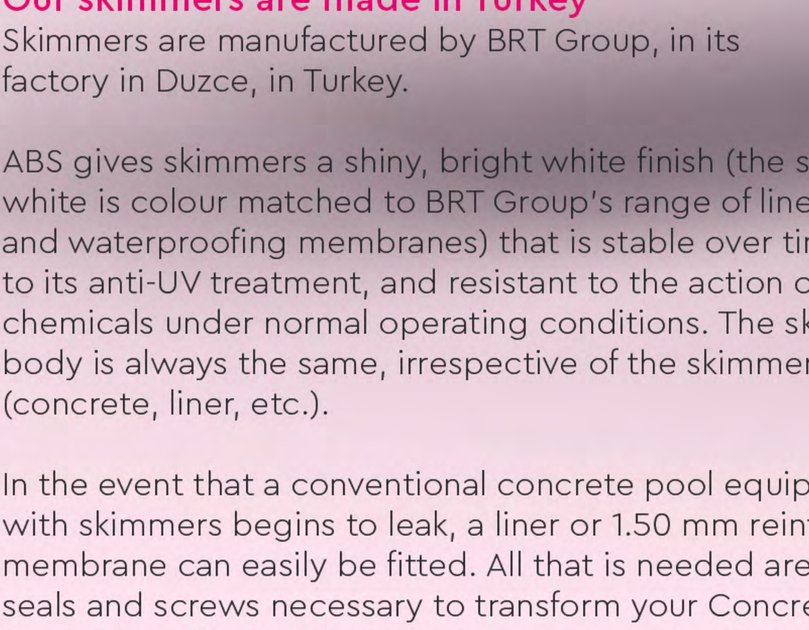

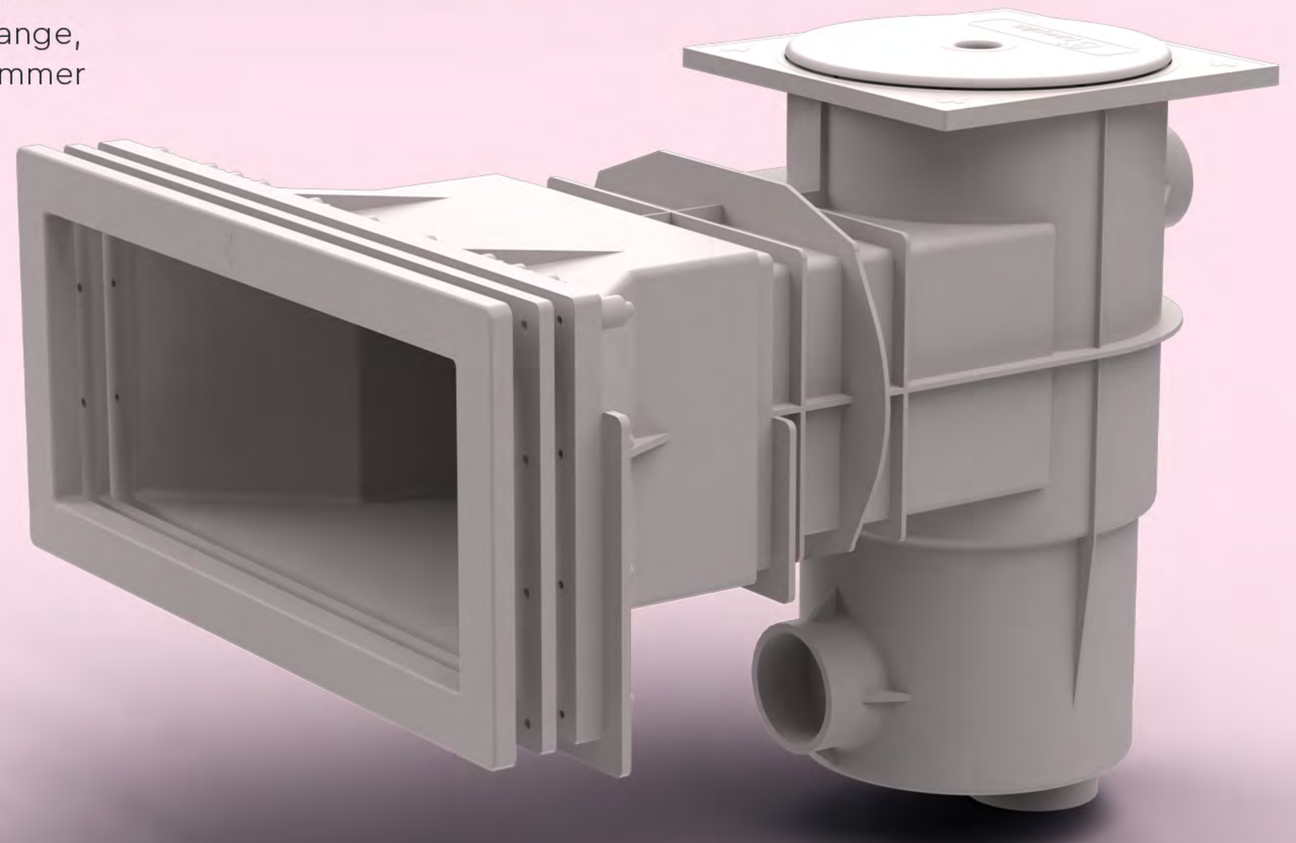





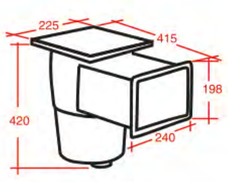

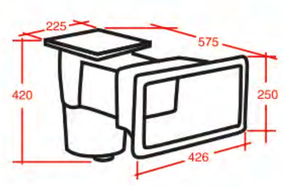

SKIMMER

FOR CONCRETE POOLS BETON İÇİN

Technical data

- Produced from ABS plastic injection
- UV resistant, unaffected by the sun

KOD CODE	MODEL MODEL	BAĞLANTI CONNECTION	ŞEKİL TYPE	FİYAT PRICE
BRTSK22	Skimmer	50	Standard	€
BRTSK23	Skimmer W	50	Geniş Wide	€

skimmer for swimming pool

SKIMMER

FOR LINER POOLS LİNER İÇİN

Technical data

- Produced from ABS plastic injection
- UV resistant, unaffected by the sun
- Flange & gasket for liner pools included in the box





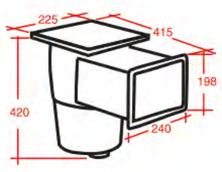

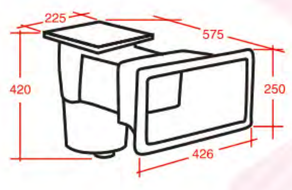

KOD CODE	MODEL MODEL	BAĞLANTI CONNECTION	ŞEKİL TYPE	FİYAT PRICE
BRTSK24	Skimmer Liner	50	Standard	€
BRTSK25	Skimmer Liner W	50	Geniş Wide	€

now with more color options 2





MINI SKIMMER

FOR SWIMMING POOLS

Technical data

All skimmer models are made of ABS plastic. Bottom suction connections: 11/2" internal thread. Complete with vacuum adapter, flange, gasket and stainless screws.

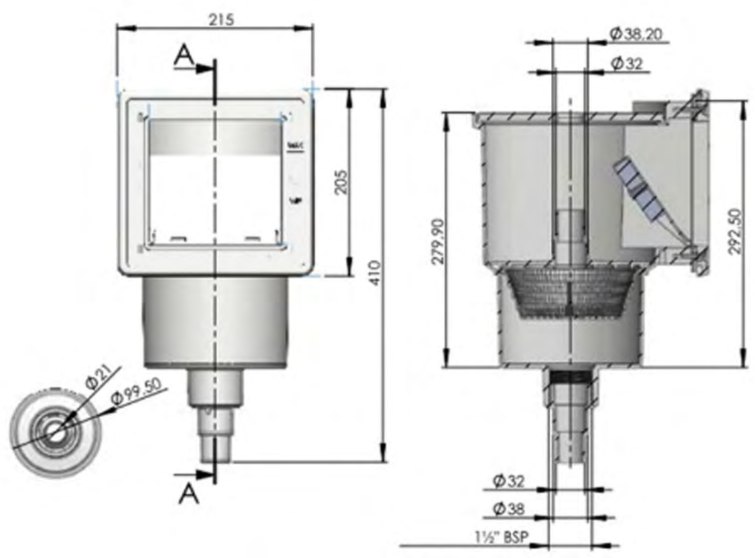

Info

The cutouts for the skimmer and the inlet nozzle
are only pre-perforated and must be added before assembly
broken out and sealed with zinc spray.

However, if you turn on the skimmer and/or the inlet nozzle
If you want to have it somewhere else, you can also make your
own cutouts using a jigsaw or an electric hacksaw prepare.

In the same way you can make the cut-outs for underwater lights
and/or a counter-current system.

For optimal water circulation, the inlet nozzles should always be
positioned opposite the skimmer.

We therefore recommend for oval pools larger than 623 × 360 cm
2 built-in skimmer and 2 inlet nozzles, both of which are in the
rounded



KOD CODE	MODEL MODEL	BAĞLANTI CONNECTION	ŞEKİL TYPE	FİYAT PRICE
BRTSK26	Skimmer Mini	50	Standard	€
BRTSK27	Skimmer Mini W	50	Geniş Wide	€



UNIVERSAL HANGING SKIMMER
FOR SWIMMING POOLS

Technical data
With the universal hanging skimmer for filter systems from 2 – 5 m³/h include dirt and leaves on the water surface of the past. The area of application includes above ground pools with inflatable ring, quick up pools as well as swimming pools with frame construction.

This skimmer efficiently and reliably collects dirt from the water surface of your pool and provides also ensures that the water is crystal clear even when you are not there remains.

This hanging skimmer can be attached in just a few simple steps assemble. You can easily put the skimmer on the pool ring or attach to the structure of your frame pool.



Sieve basket with handle simple cleaning



Frame pool attachment



Quick Up Pools



CODE	MODEL	TYPE	PRICE
BRTSK30	Skimmer Universal	Universal Hanging Skimmer	€

Scope of delivery
1 x universal hanging skimmer for filter systems of 2–5 m³/h
2 x adapters for different pool types such as B. INTEX® or BESTWAY®



Detail
Can be used universally for above-ground pools with an inflatable ring, Quick Up pools or frame pools

Debris is efficiently and reliably removed from the water surface collected

Easy attachment to the pool ring or pool structure frame pools



INLET NOZZLE BESLEME NOZULU
FOR CONCRETE POOLS BETON İÇİN

KOD CODE	MODEL PRODUCT NAME	ŞEKİL TYPE	ÇAP DIA	FİYAT PRICE
BRTSN52	Inlet Nozzle	Wall / Slip	Ø63	€
BRTSN53	Inlet Nozzle	Wall / Slip	Ø50	€

Technical data

- Produced from ABS plastic injection
- UV resistant, unaffected by the sun
- Moveable head, water direction adjustable
- Slip connection
- 63 mm or 50 mm pipe connection



INLET NOZZLE BESLEME NOZULU
FOR CONCRETE POOLS BETON İÇİN

KOD CODE	MODEL PRODUCT NAME	ŞEKİL TYPE	ÇAP DIA	FİYAT PRICE
BRTSN52	Inlet Nozzle	Floor / Slip	Ø63	€
BRTSN53	Inlet Nozzle	Floor / Slip	Ø50	€

Technical data

- Produced from ABS plastic injection
- UV resistant, unaffected by the sun
- Moveable head, water direction adjustable
- Slip connection
- 63 mm or 50 mm pipe connection



INLET NOZZLE BESLEME NOZULU
FOR LINER POOLS LINER İÇİN



KOD CODE	MODEL PRODUCT NAME	ŞEKİL TYPE	ÇAP DIA	FİYAT PRICE
BRTSN62	Inlet Nozzle	Wall / Threaded	Ø63	€

Technical data

- Produced from ABS plastic injection
- UV resistant, unaffected by the sun
- Flange & gasket for liner pools included in the box
- Angle adjustable water outle
- 63 mm pipe connection



INLET NOZZLE BESLEME NOZULU
FOR LINER POOLS LINER İÇİN

KOD CODE	MODEL PRODUCT NAME	ŞEKİL TYPE	ÇAP DIA	FİYAT PRICE
BRTSN63	Inlet Nozzle	Wall / Threaded	Ø50	€

Technical data

- Produced from ABS plastic injection
- UV resistant, unaffected by the sun
- 50 mm male or 63 mm female threaded connection
- Angle adjustable water outle
- 63 mm pipe connection

DRAINS
FOR LINER POOLS

KOD CODE	MODEL PRODUCT NAME	ŞEKİL TYPE	ÇAP DIA	FİYAT PRICE
BRTSN72	Round Drain	Threaded	Ø63	€



Technical data
- Produced from ABS plastic injection
- Strong and durable body structure
- Connection diameter: 2'' (63 mm)
- Body diameter: 210 mm
- UV resistant, unaffected by the sun

ROUND DRAIN
FOR LINER POOLS

KOD CODE	MODEL PRODUCT NAME	ŞEKİL TYPE	ÇAP DIA	FİYAT PRICE
BRTSN73	Round Drain	Threaded	Ø63	€



Technical data
- Produced from ABS plastic injection
- Strong and durable body structure
- Connection diameter: 2'' (63 mm)
- Body diameter: 218 mm

DRAIN COVER STAINLESS STEEL
FOR LINER & CONCRETE POOLS

Technical data
- A304 STAINLESS STEEL

KOD CODE	MODEL PRODUCT NAME	ÖLÇÜ mm DIMENSION mm	FİYAT PRICE
BRTDA41	Drain Cover Stainless Steel	20×20	€
BRTDA42	Drain Cover Stainless Steel	25×25	€
BRTDA43	Drain Cover Stainless Steel	30×30	€
BRTDA44	Drain Cover Stainless Steel	45×45	€
BRTDA45	Drain Cover Stainless Steel	50×50	€
BRTDA46	Drain Cover Stainless Steel	55×55	€
BRTDA47	Drain Cover Stainless Steel	60×60	€



GROUP BARUT



LED LIGHTS LED LAMBA

FOR LINER AND CONCRETE POOLS LİNER ve BETON İÇİN

Technical data

- For concrete and liner pools
- Mounted on the pool covering
- Water cooled, can be used only under water
- Large angle wind screen from polycarbonate

KOD CODE	MODEL PRODUCT NAME	RENK COLOR	GÜÇ POWER	FİYAT PRICE
BRTLG81	LED LIGHTS CONCRETE	Blue	30w-12v	€
BRTLG82	LED LIGHTS CONCRETE	Cold White	30w-12v	€
BRTLG83	LED LIGHTS CONCRETE	Warm White	30w-12v	€
BRTLG84	LED LIGHTS CONCRETE	RGB 4 Cores	30w-12v	€
BRTLG85	LED LIGHTS CONCRETE	RGB 2 Cores	30w-12v	€
BRTLG86	LED LIGHTS LINER	Blue	30w-12v	€
BRTLG87	LED LIGHTS LINER	Cold White	30w-12v	€
BRTLG88	LED LIGHTS LINER	Warm White	30w-12v	€
BRTLG89	LED LIGHTS LINER	RGB 4 Cores	30w-12v	€
BRTLG90	LED LIGHTS LINER	RGB 2 Cores	30w-12v	€



LED LIGHTS LED LAMBA

FOR LINER AND CONCRETE POOLS LİNER ve BETON İÇİN

Technical data

- For concrete and liner pools
- Mounted on the pool covering
- Water cooled, can be used only under water
- Large angle wind screen from polycarbonate

KOD CODE	MODEL PRODUCT NAME	RENK COLOR	GÜÇ POWER	FİYAT PRICE
BRTLG91	LED LIGHTS CONCRETE	Day Light	20w-12v	€
BRTLG92	LED LIGHTS CONCRETE	Cold Light	20w-12v	€
BRTLG93	LED LIGHTS CONCRETE	Blue	20w-12v	€
BRTLG94	LED LIGHTS LINER	Day Light	20w-12v	€
BRTLG95	LED LIGHTS LINER	Cold Light	20w-12v	€
BRTLG96	LED LIGHTS LINER	Blue	20w-12v	€



LED LIGHTS LED LAMBA

STAINLESS STEEL FRAMED PASLANMAZ ÇELİK ÇERÇEVELİ

Technical data

- For concrete pools
- Plastic injection niche will be installed in concrete
- AISI 316 stainless steel front frame
- Water cooled, can be used only under water
- PAR 56 300W 12v filament bulb
- With electrical connection cable
- Complete with stainless steel bolts and nuts

KOD CODE	MODEL PRODUCT NAME	AĞIRLIK Kg WEIGHT Kg	HACİM m3 VOLUME m3	GÜÇ POWER	FİYAT PRICE
BRTLG99	Liner	2,82	0,015	300w-12v	€

PAR 56 HALOGEN
FOR SWIMMING POOLS

KOD CODE	MODEL PRODUCT NAME	RENK COLOR	GÜÇ POWER	FİYAT PRICE
BRTAM22	Par 56 Halogen	Day Light	300w-12v	€



Technical data:
- Glass body
- Water cooled, can be used only under water

POWER LED
FOR SWIMMING POOLS

KOD CODE	MODEL PRODUCT NAME	RENK COLOR	GÜÇ POWER	FİYAT PRICE
BRTAM23	JSMD-L06 POWERLED	Warm White	20w-12v	€
BRTAM24	JSMD-L07 POWERLED	Cold White	20w-12v	€
BRTAM25	JSMD-L08 POWERLED	Blue	20w-12v	€



Technical data
- PAR 56 LED bulbs
- Large angle wind screen from polycarbonate
- POWERLED
- Suitable for under water
- Long lasting and competitive price

POWER LED
FOR SWIMMING POOLS

KOD CODE	MODEL PRODUCT NAME	RENK COLOR	GÜÇ POWER	FİYAT PRICE
BRTAM36	JSMD-L10 SMD LED	Warm White	30w-12v	€
BRTAM37	JSMD-L11 SMD LED	Cold White	30w-12v	€
BRTAM38	JSMD-L12 SMD LED	Blue	30w-12v	€
BRTAM39	JSMD-L13 SMD LED	RGB 4 Cores	30w-12v	€
BRTAM40	JSMD-L13 SMD LED	RGB 2 Cores	30w-12v	€



Technical data
- PAR 56 LED bulbs
- Large angle wind screen from polycarbonate
- 54 SMD leds
- Suitable for under water
- Long lasting and competitive price



RGB CONTROL PANEL

RGB CONTROL PANEL & REMOTE CONTROL

Technical data

- ▶ Produced from ABS plastic injection
- ▶ Corrosion-resistant
- ▶ With remote control
- ▶ 4 main colors and animation programs

KOD CODE	MODEL MODEL	FİYAT PRICE
BRTRC11	8 LAMPS	€
BRTRC12	16 LAMPS	€
BRTRC13	24 LAMPS	€
BRTRC14	32 LAMPS	€



TRANSFORMER

FOR SWIMMING POOL

Technical data

- ▶ PP plastic injection body
- ▶ Protected power connection with lid
- ▶ Led indicator
- ▶ With fuse
- ▶ Stylish design
- ▶ Long lasting
- ▶ Easy to install

KOD CODE	MODEL MODEL	FİYAT PRICE
BRTRA31	100W – 12v	€
BRTRA32	100W – 24v	€
BRTRA33	150W – 12v	€
BRTRA34	150W – 24v	€
BRTRA35	300W – 12v	€
BRTRA36	300W – 24v	€
BRTRA37	400W – 12v	€
BRTRA38	400W – 24v	€
BRTRA39	600W – 12v	€
BRTRA40	600W – 24v	€

ACCESSORIES
BARUT
GROUP



5

LADDERS



STANDARD

- PERFECT DESIGN
- STEEL STAINLESS
- PLASTIC STEPS OPTIONS



MURO

- PERFECT DESIGN
- STEEL STAINLESS
- PLASTIC STEPS OPTIONS



MIXTA

- PERFECT DESIGN
- STEEL STAINLESS
- PLASTIC STEPS OPTIONS



OPEN TYPE

- PERFECT DESIGN
- STEEL STAINLESS
- PLASTIC STEPS OPTIONS



STANDARD SERIES STANDART SERİ

PLASTIC STEP PLASTİK BASAMAKLI

42mm 304-L stainless steel tube

Flow drilling: The treads are fastened to the upright tubes through flow drilled holes on the tread-side, this method ensures an empeccably smooth finish with no sharp edges likely to cause injury,

Stainless steel treads
(reinforced resin end pieces),
SS treads (with reinforced resin end pieces,
Type a4 nuts and bolts,
Comes with 2 anchor sockets and 2 escutcheon plates in stainess steel.

KOD CODE	MODEL MODEL	BASAMAK STEP	AĞIRLIK WEIGHT	EBAT SIZE	FİYAT PRICE
STDMPB1	STANDARD P STEP	2	10 Kg	0,66×1,38×0,06	€
STDMPB2	STANDARD P STEP	3	11,5	0,66×1,63×0,06	€
STDMPB3	STANDARD P STEP	4	13,5	0,66×1,88×0,06	€
STDMPB4	STANDARD P STEP	5	15	0,66×2,10×0,06	€

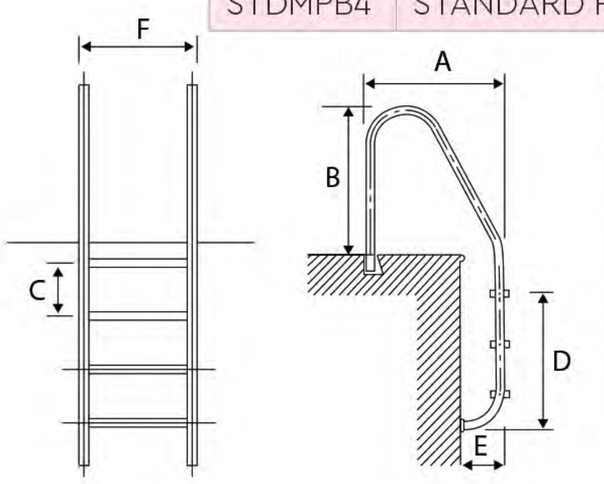

A (mm)	B	C	D	E	F
700	650	250	580	180	500
700	650	250	830	180	500
700	650	250	1080	180	500
700	650	250	1330	180	500

Please contact us to get information about the 316 AISI



MURO SERIES MURO SERİSİ

PLASTIC STEP PLASTİK BASAMAKLI

42mm 304-L stainless steel tube

Two versions are available: one delivered with 2 anchor sockets the other with 2 anchor flanges (for wooden pools),
2 decorative stainless steel escutcheon plates,
Flow drilling: The treads are fastened to the upright tubes through flow drilled holes on the tread-side, this method ensures an empeccably smooth finish with no sharp edges likely to cause injury,
SS treads (with reinforced resin end pieces,
Type a4 nuts and bolts.

KOD CODE	MODEL MODEL	BASAMAK STEP	AĞIRLIK WEIGHT	EBAT SIZE	FİYAT PRICE
MRMPB1	MURO P STEP	2	9,5	0,41×1,38×0,06	€
MRMPB2	MURO P STEP	3	10,5	0,41×1,60×0,06	€
MRMPB3	MURO P STEP	4	12,5	0,41×1,88×0,06	€
MRMPB4	MURO P STEP	5	14	0,41×2,13×0,06	€

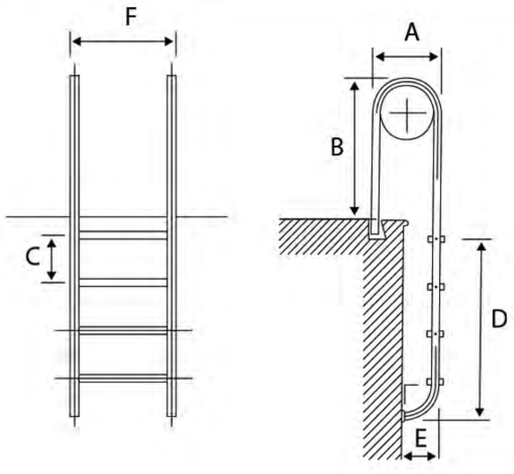

A (mm)	B	C	D	E	F
330	650	250	679	180	500
330	650	250	929	180	500
330	650	250	1179	180	500
330	650	250	1429	180	500

now with more color options





STANDARD SERIES STANDART SERİ

STEEL STAINLESS STEP PASLANMAZ BASAMAKLI

42mm 304-L stainless steel tube

Flow drilling: The treads are fastened to the upright tubes through flow drilled holes on the tread-side, this method ensures an empeccably smooth finish with no sharp edges likely to cause injury,

Stainless steel treads
(reinforced resin end pieces),
SS treads (with reinforced resin end pieces,
Type a4 nuts and bolts,
Comes with 2 anchor sockets and 2 escutcheon plates in stainess steel.

KOD CODE	MODEL MODEL	BASAMAK STEP	AĞIRLIK WEIGHT	EBAT SIZE	FİYAT PRICE
STDM1	STANDARD	2	10 Kg	0,66×1,38×0,06	€
STDM2	STANDARD	3	11,5	0,66×1,63×0,06	€
STDM3	STANDARD	4	13,5	0,66×1,88×0,06	€
STDM4	STANDARD	5	15	0,66×2,10×0,06	€

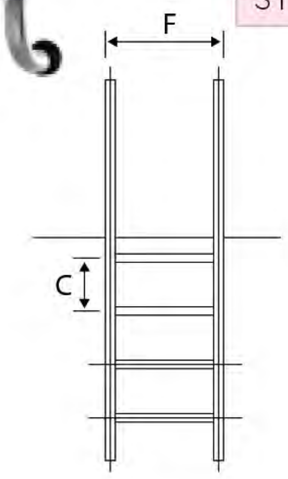

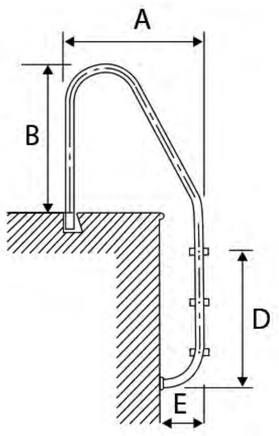

A (mm)	B	C	D	E	F
700	650	250	580	180	500
700	650	250	830	180	500
700	650	250	1080	180	500
700	650	250	1330	180	500

Please contact us to get information about the 316 AISI



MURO SERIES MURO SERİSİ

STEEL STAINLESS STEP PASLANMAZ BASAMAKLI

42mm 304-L stainless steel tube

Two versions are available: one delivered with 2 anchor sockets the other with 2 anchor flanges (for wooden pools),
2 decorative stainless steel escutcheon plates,
Flow drilling: The treads are fastened to the upright tubes through flow drilled holes on the tread-side, this method ensures an empeccably smooth finish with no sharp edges likely to cause injury,
SS treads (with reinforced resin end pieces,
Type a4 nuts and bolts.

KOD CODE	MODEL MODEL	BASAMAK STEP	AĞIRLIK WEIGHT	EBAT SIZE	FİYAT PRICE
MRM1	MURO	2	9,5	0,41×1,38×0,06	€
MRM2	MURO	3	10,5	0,41×1,60×0,06	€
MRM3	MURO	4	12,5	0,41×1,88×0,06	€
MRM4	MURO	5	14	0,41×2,13×0,06	€

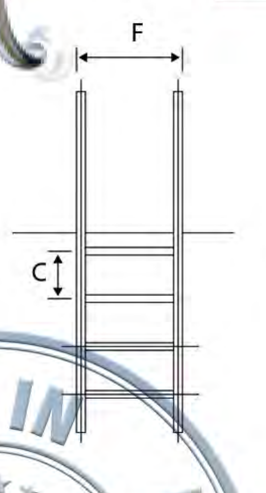

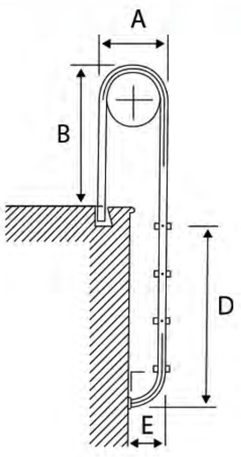

A (mm)	B	C	D	E	F
330	650	250	679	180	500
330	650	250	929	180	500
330	650	250	1179	180	500
330	650	250	1429	180	500

LADDERS
BARUT GROUP



MIXTA SERIES MIXTA SERİSİ

PLASTIC STEP PLASTİK BASAMAKLI

42mm 304-L stainless steel tube

Flow drilling: The treads are fastened to the upright tubes through flow drilled holes on the tread-side, this method ensures an empeccably smooth finish with no sharp edges likely to cause injury,

Stainless steel treads
(reinforced resin end pieces),
SS treads (with reinforced resin end pieces,
Type a4 nuts and bolts,
Comes with 2 anchor sockets and 2 escutcheon plates in stainess steel.

KOD CODE	MODEL MODEL	BASAMAK STEP	AĞIRLIK WEIGHT	EBAT SIZE	FİYAT PRICE
MXMPB1	MIXTA P STEP	2	10	0,66×1,38×0,06	€
MXMPB2	MIXTA P STEP	3	11,5	0,66×1,63×0,06	€
MXMPB3	MIXTA P STEP	4	13,5	0,66×1,88×0,06	€
MXMPB4	MIXTA P STEP	5	15	0,66×2,10×0,06	€

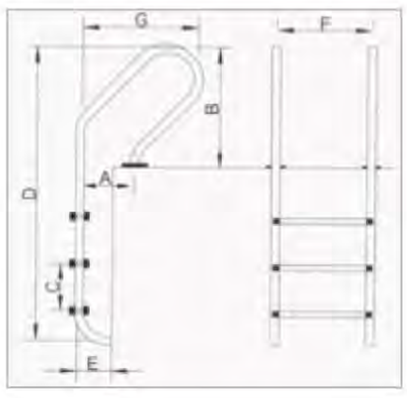

STEP	B mm	C mm	D mm	E mm	F mm	G mm
2	710	250	1400	180	600	550
3	710	250	1610	180	600	620
4	710	250	1880	180	600	620
5	710	250	2120	180	600	620

Please contact us to get information about the 316 AISI



OPEN TYPE AÇIK TİP

PLASTIC STEP PLASTİK BASAMAKLI

42mm 304-L stainless steel tube

Two versions are available: one delivered with 2 anchor sockets the other with 2 anchor flanges (for wooden pools),
2 decorative stainless steel escutcheon plates,
Flow drilling: The treads are fastened to the upright tubes through flow drilled holes on the tread-side, this method ensures an empeccably smooth finish with no sharp edges likely to cause injury,
SS treads (with reinforced resin end pieces,
Type a4 nuts and bolts.

KOD CODE	MODEL MODEL	BASAMAK STEP	AĞIRLIK WEIGHT	EBAT SIZE	FİYAT PRICE
ATMPB1	OPEN TYPE P STEP	2	12,5	1,13×1,53×0,06	€
ATMPB2	OPEN TYPE P STEP	3	13	-	€
ATMPB3	OPEN TYPE P STEP	4	15	1,13×2,03×0,06	€
ATMPB4	OPEN TYPE P STEP	5	17,5	-	€

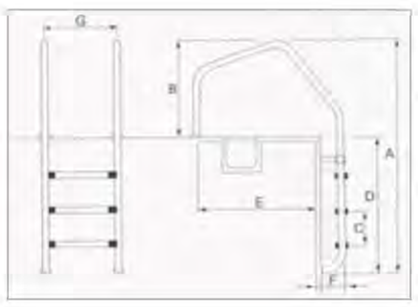

STEP	A mm	B mm	C mm	D mm	E mm	F mm	G mm
2	1390	680	250	710	842	180	500
3	1650	720	250	960	842	180	600
4	1890	680	250	1210	842	180	500
5	2140	680	250	1460	842	180	500

now with more color options





MIXTA SERIES MIXTA SERİSİ

STEEL STAINLESS STEP PASLANMAZ BASAMAKLI

42mm 304-L stainless steel tube

Flow drilling: The treads are fastened to the upright tubes through flow drilled holes on the tread-side, this method ensures an empeccably smooth finish with no sharp edges likely to cause injury,

Stainless steel treads
(reinforced resin end pieces),
SS treads (with reinforced resin end pieces,
Type a4 nuts and bolts,
Comes with 2 anchor sockets and 2 escutcheon plates in stainess steel.

KOD CODE	MODEL MODEL	BASAMAK STEP	AĞIRLIK WEIGHT	EBAT SIZE	FİYAT PRICE
MXM1	MIXTA	2	10	0,66×1,38×0,06	€
MXM2	MIXTA	3	11,5	0,66×1,63×0,06	€
MXM3	MIXTA	4	13,5	0,66×1,88×0,06	€
MXM4	MIXTA	5	15	0,66×2,10×0,06	€

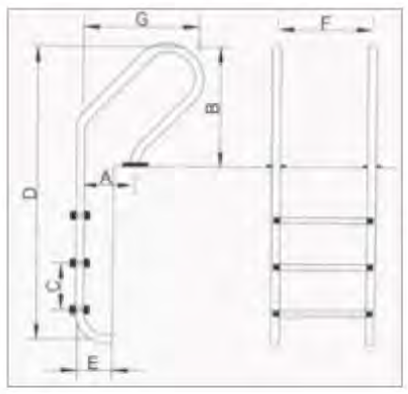

STEP	B mm	C mm	D mm	E mm	F mm	G mm
2	710	250	1400	180	600	550
3	710	250	1610	180	600	620
4	710	250	1880	180	600	620
5	710	250	2120	180	600	620

Please contact us to get information about the 316 AISI



OPEN TYPE AÇIK TİP

STEEL STAINLESS STEP PASLANMAZ BASAMAKLI

42mm 304-L stainless steel tube

Two versions are available: one delivered with 2 anchor sockets the other with 2 anchor flanges (for wooden pools),
2 decorative stainless steel escutcheon plates,
Flow drilling: The treads are fastened to the upright tubes through flow drilled holes on the tread-side, this method ensures an empeccably smooth finish with no sharp edges likely to cause injury,
SS treads (with reinforced resin end pieces,
Type a4 nuts and bolts.

KOD CODE	MODEL MODEL	BASAMAK STEP	AĞIRLIK WEIGHT	EBAT SIZE	FİYAT PRICE
ATM1	OPEN TYPE	2	12,5	1,13×1,53×0,06	€
ATM2	OPEN TYPE	3	13	-	€
ATM3	OPEN TYPE	4	15	1,13×2,03×0,06	€
ATM4	OPEN TYPE	5	17,5	-	€

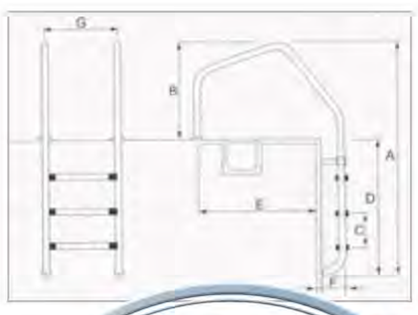

STEP	A mm	B mm	C mm	D mm	E mm	F mm	G mm
2	1390	680	250	710	842	180	500
3	1650	720	250	960	842	180	600
4	1890	680	250	1210	842	180	500
5	2140	680	250	1460	842	180	500

LADDERS
BARUT GROUP



BRIDGE LADDER PLASTIC

ZEMİN ÜSTÜ PLASTİK BASAMAKLI

Ø 43 mm – 304 steel tube

- Plastic steps
- Supported weight from 150 Kg, up to the maximum deformation with a MAX weight of 250 Kg
- Double ladder for above ground pool.
- Complete with all accessories for installation.

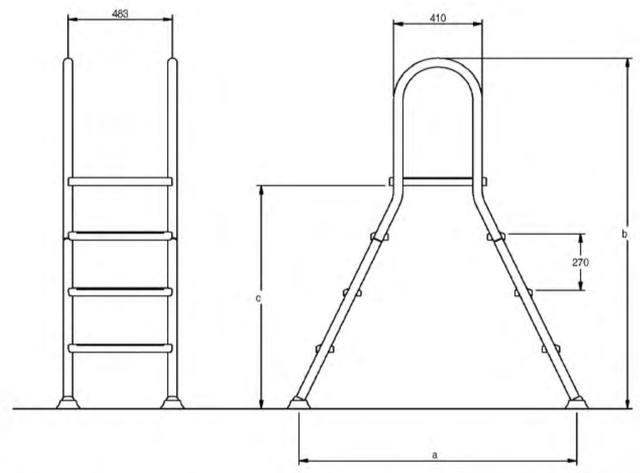

CODE	MODEL	STEP	AISI	PRICE
BLPB101	BRIDGE LADDER PLASTIC	4/4	304	Call for Price
BLPB102	BRIDGE LADDER PLASTIC	5/5	304	Call for Price

CODE	A mm	B mm	C mm
BLPB101	1350	1900	1295
BLPB102	1545	2130	1525

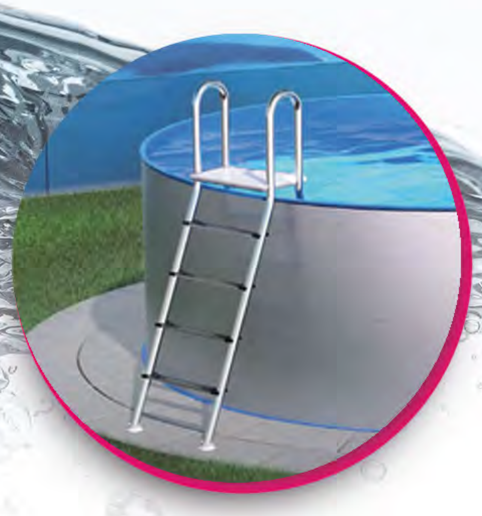

Please contact us to get information about the 316 AISI



HALF BRIDGE LADDER PLASTIC

ZEMİN ÜSTÜ YARIM TİP PLASTİK BASAMAKLI

Ø 43 mm – 304 steel tube

- Plastic steps
- Supported weight from 150 Kg, up to the maximum deformation with a MAX weight of 250 Kg
- Double ladder for above ground pool.
- Complete with all accessories for installation.

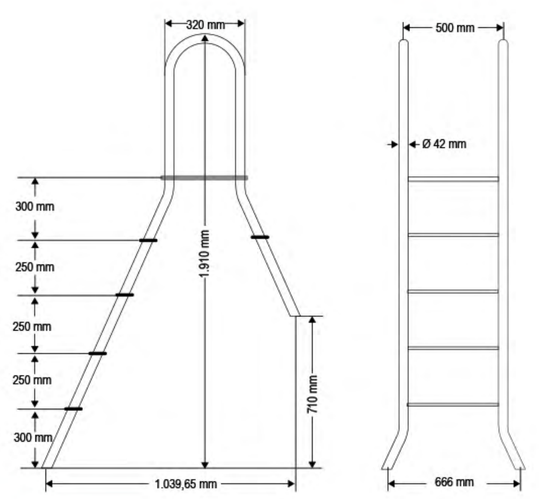

CODE	MODEL	STEP	AISI	PRICE
HBLPB25	HALF BRIDGE PLASTIC	4/1	304	Call for Price
HBLPB26	HALF BRIDGE PLASTIC	5/1	304	Call for Price



MADE IN BRT POOL PRODUCTION FOCUS MADE IN

now with more color options 2



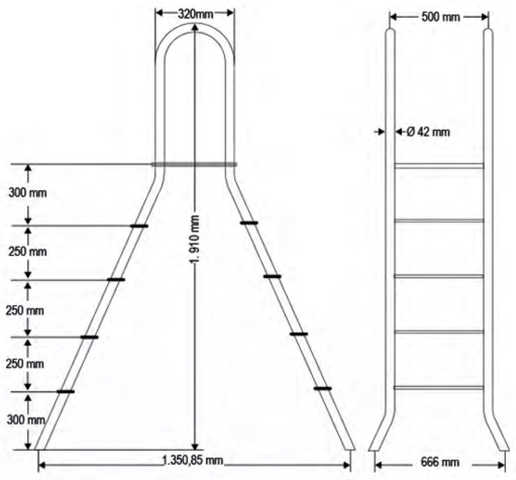

BRIDGE LADDER

ZEMİN ÜSTÜ PASLANMAZ MERDİVEN

Ø 42 mm – 304 stainless steel tube

- Steel stainless steps
- Supported weight from 150 Kg, up to the maximum deformation with a MAX weight of 250 Kg
- Double ladder for above ground pool.
- Complete with all accessories for installation.



CODE	MODEL	STEP	AISI	PRICE
BLCB201	BRIDGE LADDER	4/4	304	Call for Price
BLCB202	BRIDGE LADDER	5/5	304	Call for Price



Please contact us to get information about the 316 AISI

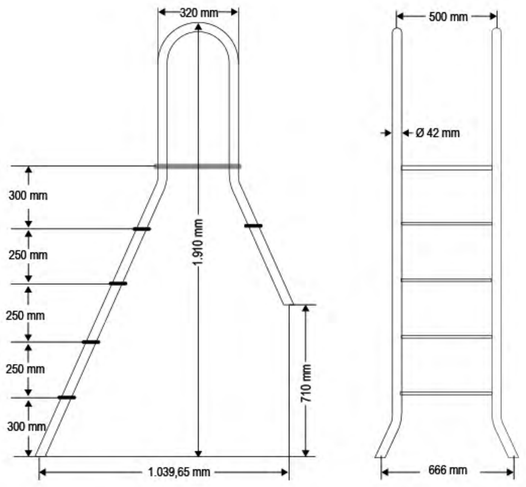

HALF BRIDGE LADDER

ZEMİN ÜSTÜ YARIM TİP PASLANMAZ MERDİVEN

Ø 42 mm – 304 stainless steel tube

- Steel stainless steps
- Supported weight from 150 Kg, up to the maximum deformation with a MAX weight of 250 Kg
- Double ladder for above ground pool.
- Complete with all accessories for installation.



CODE	MODEL	STEP	AISI	PRICE
HBLCB35	HALF BRIDGE LADDER	4/1	304	Call for Price
HBLCB36	HALF BRIDGE LADDER	5/1	304	Call for Price

By using V2A stainless steel, they offer enormous Comfort and support (suitable up to 120 kg) when getting on and off in the pool.

In addition, the erecting ladder is extremely stable due to the handlebar diameter of Ø 42 mm* and the angled one below legs.

The high-quality installation ladders are for all types of pools and shapes suitable. The ladder rails made of V2A stainless steel offer an optimal hold, as well as the steps made of V2A stainless steel with anti-slip embossing.



Not every installation ladder is suitable for every pool depth.
Hence we recommend the following stainless steel ladders for the respective pool height.

Both stainless steel grades V2A and V4A are resistant to UV radiation and chlorine pool care products. However, should
Be careful that the following chloride ion values not be exceeded.

Permissible chloride ions for material V2A = 150 mg/l
Permissible chloride ions for material V4A = 400 mg/l



HANDRAILS TUTAMAKLAR

STEEL STAINLESS PASLANMAZ ÇELİK

CODE	PRODUCT NAME	DIAMETER	LENGHT	PRICE
BRTPR12	Pool Handrails	45	0,50m	€
BRTPR13	Pool Handrails	45	1,00m	€
BRTPR14	Pool Handrails	45	2,00m	€
BRTPR15	Pool Handrails	45	2,50m	€



POOL UNDERCOVER LADDER BASAMAK İÇİN TUTAMAK

OUTSIDE HAVUZ DIŞI TİP

CODE	PRODUCT NAME	PRICE
BRTPA12	Pool Undercover Ladder	€
BRTPA13	-	€

AISI 304 Stainless Steel made handrail can be assambled to concrete steps outside the pool with screws to make easier downward and upward motions.

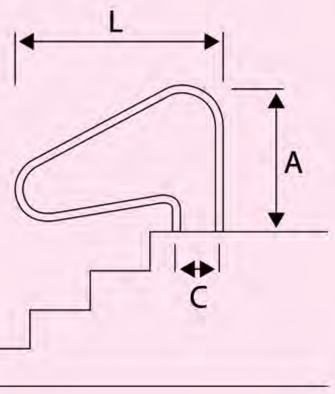

DIAMETER	L	A	B
45mm	1250mm	1800mm	203mm



POOL STEPS HANDRAIL BASAMAK İÇİN TUTAMAK

INSIDE THE POOL HAVUZ İÇİNE UZANAN TİP

CODE	PRODUCT NAME	PRICE
BRTPA14	Pool Steps Handrail	€
BRTPA15	-	€

AISI 304 Stainless Steel made handrail can be assambled to concrete steps outside the pool with screws to make easier downward and upward motions.

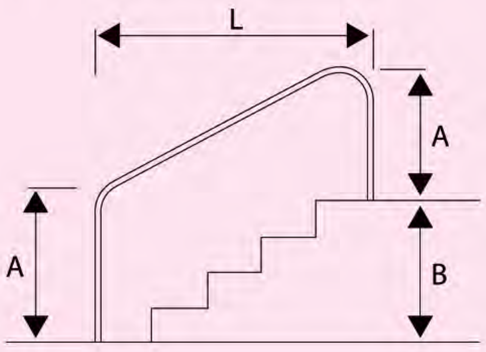

DIAMETER	L	A	B
45mm	1524mm	800mm	855mm

DIVING BOARD TRAMPLEN
FOR SWIMMING POOL

Produced from fiberglass reinforced polyester and has antislip surface straight table with bottom case.

CODE	MODEL	LENGHT	WIDTH	PRICE
BRTTR34	Diving Board	2 mt	0,35 mt	€



MASHROOM WATERFALL MANTAR ŞELALE
PLATES WITHOUT

It is produced with Ctp (Glass Reinforced Polyester) Isophthalic Resin.
Its resistance to chemical and sun rays is quite high.

CODE	PRODUCT NAME	LENGHT	PRICE
BRT8341	1000 mm Mashroom Waterfall	40 m^3/h – 2 ½"	€
BRT8342	1600 mm Mashroom Waterfall	80 m^3/h – 4"	€
BRT8343	2000 mm Mashroom Waterfall	150 m^3/h – 6"	€







BARUT GROUP



NON-SLIP PLASTIC STAIR STEP
KAYMAZ PLASTİK BASAMAK

CODE	PRODUCT NAME	PRICE
BRTS901	Non-Slip Plastic Stair Step	€



NON-SLIP COLORS PLASTIC STEP
KAYMAZ PLASTİK BASAMAK RENKLİ

CODE	PRODUCT NAME	PRICE
BRTS902	Color Plastic Stair Step	€



PLASTIC AND STAINLESS ANCHOR CLOSING
ANKRAJ ÇERÇEVESİ

CODE	PRODUCT NAME	PRICE
BRTS951	Plastic Anchor Closing	€
BRTS952	Stainless Anchor Closing	€



STAINLESS ANCHOR
MERDİVENLER İÇİN PASLANMAZ ÇELİK ANKJRAJ

CODE	PRODUCT NAME	PRICE
BRTS921	Stainless Anchor	€



PLASTIC STAIRS WEDGE
MERDİVENLER İÇİN PABUÇ

CODE	PRODUCT NAME	PRICE
BRTS925	Plastic Stairs wedge	€

NON-SLIP PLASTIC STAIR STEP
MERDİVENLER İÇİN PLASTİK ANKRAJ

CODE	PRODUCT NAME	PRICE
BRTS971	Plastic Anchor	€



NON-SLIP STAINLESS STAIR STEP
KAYMAZ PASLANMAZ BASAMAK

CODE	PRODUCT NAME	PRICE
BRTS972	S/S Step	€



PLASTIC AND STAINLESS ANCHOR CLOSING
PLASTİK ve PASLANMAZ ANRAJ KAPAMA APARATI

CODE	PRODUCT NAME	PRICE
BRTS973	S/S Screws	€



FOOT WASHING BOAT
AYAK YIKAMA TEKNESİ

CODE	PRODUCT NAME	WIDTH	LENGHT	DEPTH	PRICE
BRTPR12	Polyester and fiberglass made. Used before entering the pool as disinfector.	30 cm	50 cm	9 cm	€
BRTPR13		50 cm	80 cm	9 cm	€
BRTPR14		70 cm	120 cm	9 cm	€



STAIRS ANKESTRE



ELEGANCE OVAL

- POLYESTER FORM
- FOR OVAL TYPE



ELEGANCE FLAT

- POLYESTER FORM
- FOR ALL TYPE



RAVENNA CORNER

- POLYETHYLENE FORM
- FOR FIPLUS & ZNPLUS TYPE

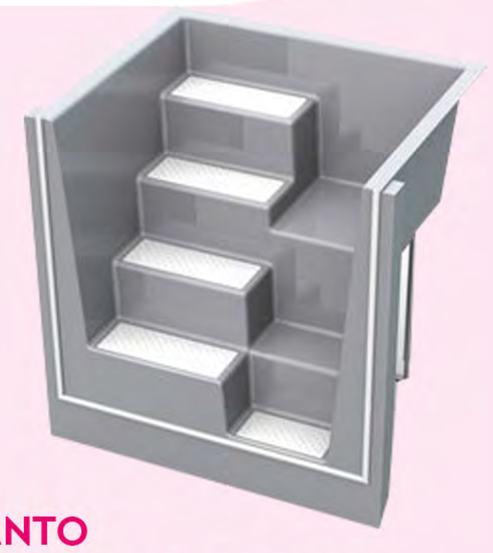

KANTO

- MULTI COLOR OPTIONS
- POLYETHYLENE FORM
- FOR ALL TYPE POOLS



POLYESTER STAIRS

- MULTI COLOR OPTIONS
- FIBER FORM
- FOR FIPLUS & ZNPLUS TYPE



ESCADA ROMAN

- STEEL STAINLESS
- FOR ALL TYPE POOLS



ESCADA ROMAN SQUARE

- STEEL STAINLESS
- FOR ALL TYPE POOLS



REVENNA CORNER

- STEEL STAINLESS
- FOR FIPLUS & ZNPLUS FORM

KANTO GALVO

- STEEL STAINLESS
- FOR ALL TYPE POOLS

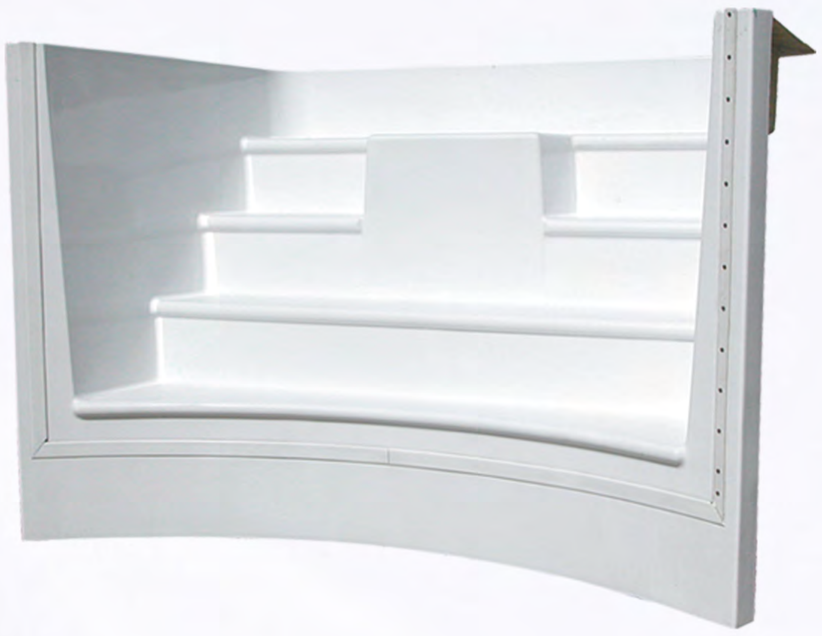



ELEGANCE OVAL ELEGANCE OVAL
POLYESTER FORM POLYESTER FORMDA

Descriptions
Made of polyester, wood reinforced. Liner coating does not leak
for connection; It is complete with a concealed cover and a special PVC
flange. The steps are non-slip surface. Our fiber ladder is oval
It can be applied to short sides in our models in forms.

Important
For pools with radius. Massage or countercurrent system
mounting is available.

Technicial Specifications
Depth: 227 cm, Width: 157 cm, Height: 151.5 cm





ELEGANCE FLAT ELEGANCE DÜZ
FOLYESTER FORM POLYESTER FORMDA

Descriptions
Made of polyester, wood reinforced. Liner coating does not leak
for connection; It is complete with a concealed cover and a special PVC
flange. The steps are non-slip surface. Our fiber ladder is both panel,
It can be applied in our models in both oval forms.

Important
For our MALDIV model pools in oval forms
The application is carried out only on the long side.

Technicial Specifications
Depth: 184 cm, Width: 106 cm, Height: 104.5 cm



RAVENNA CORNER RAVENNA KÖŞE MERDİVEN

POLYETHYLENE FORM POLIETILEN FORMDA

Descriptions

The "Ravenna Eck 200×200" corner staircase consists of 4 steps of which the second step provides plenty of space for sitting. This staircase is available with a screw-on terminal strip for foil pools or with a PVC terminal strip for gluing in 1.5 mm thick foil.

Technicial Specifications

Dimensions L x W x D: 2.000 × 2.000 × 1.510mm
Transport weight: 140 kg
Recommendation for coping stones: straight stones, flat along the stairs

KOD CODE	MODEL MODEL	BASAMAK STEP NUMBER	AĞIRLIK WEIGHT	EBAT SIZE
-	Revenna Corner	4	50	200 × 200 × 151

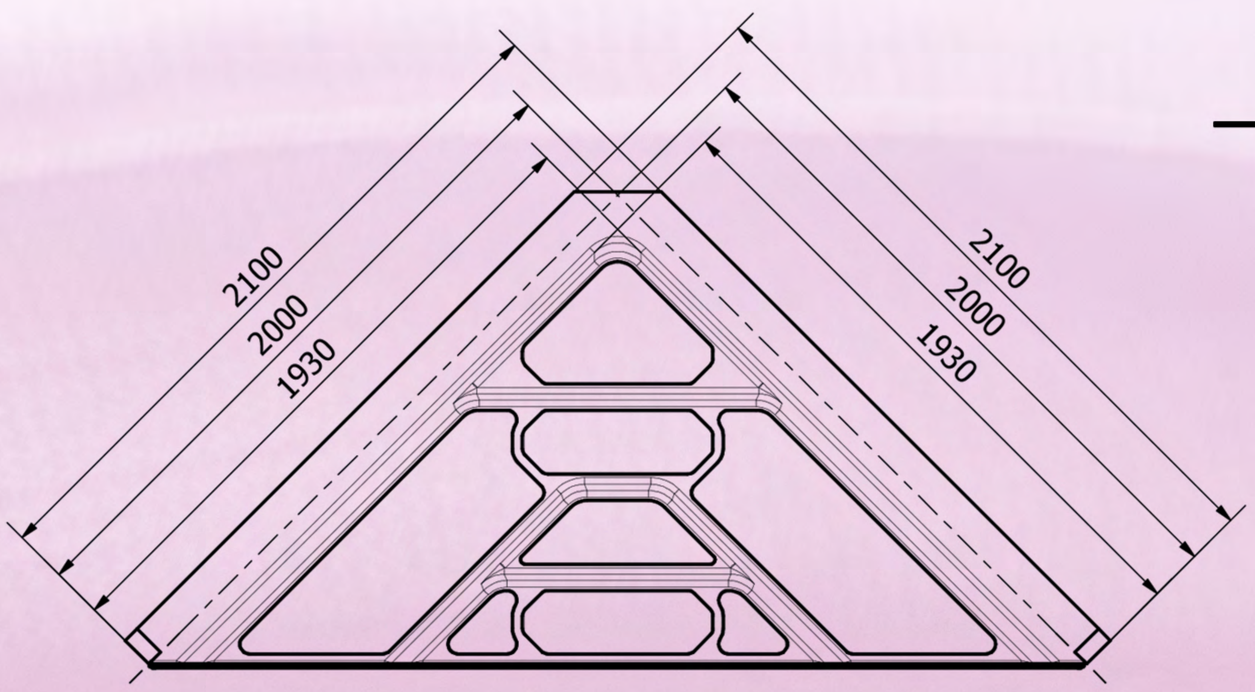

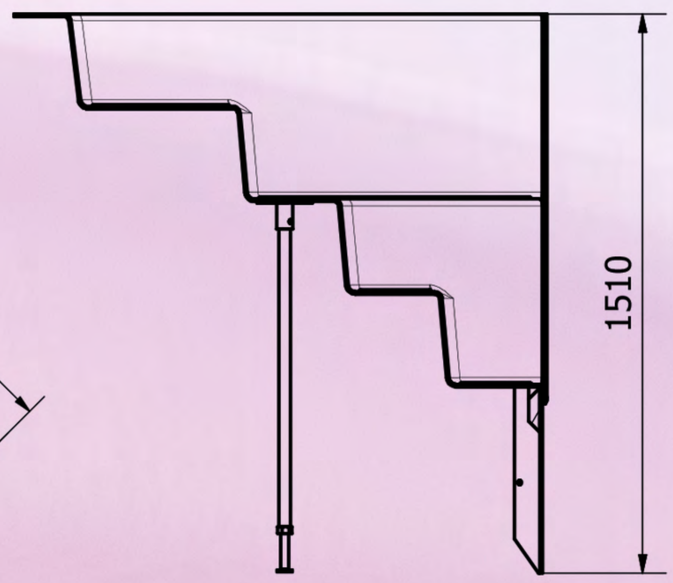



RIO STAIRS RIO MERDİVEN
POLYETHYLENE FORM POLIETILEN FORMDA

Descriptions
This staircase is intended for intermediate – wall – assembly and is adjusted at the rear side and backfilled with concrete!

Technicial Specifications
Measurements L x W x D: 1.075 × 1.500 × 1.510mm
Transport weight: 86 kg
Recommendation for coping stones: 2 pieces, radius 500 mm with straight intermediate brick

KOD CODE	MODEL MODEL	BASAMAK STEP NUMBER	AĞIRLIK WEIGHT	EBAT SIZE
-	Rio	5	50	107,5 × 150 × 151
-	Rio	6	50	-

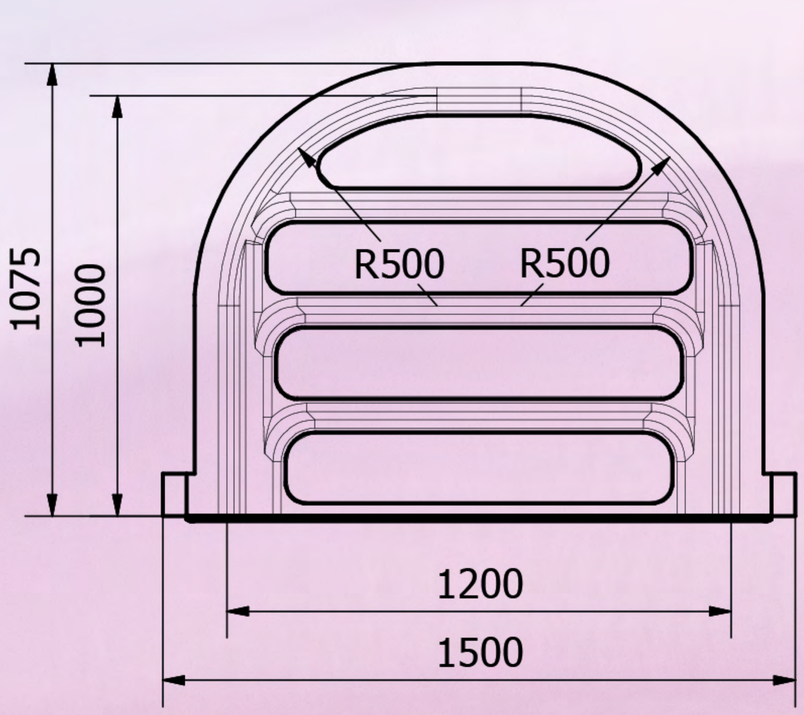

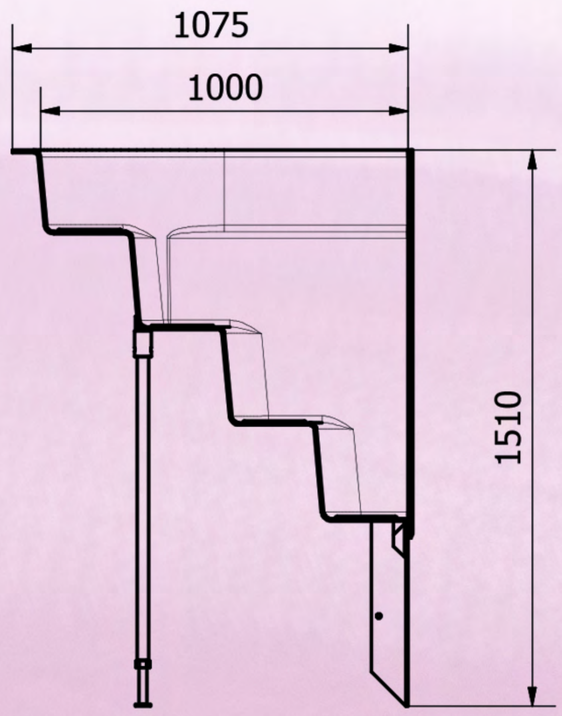

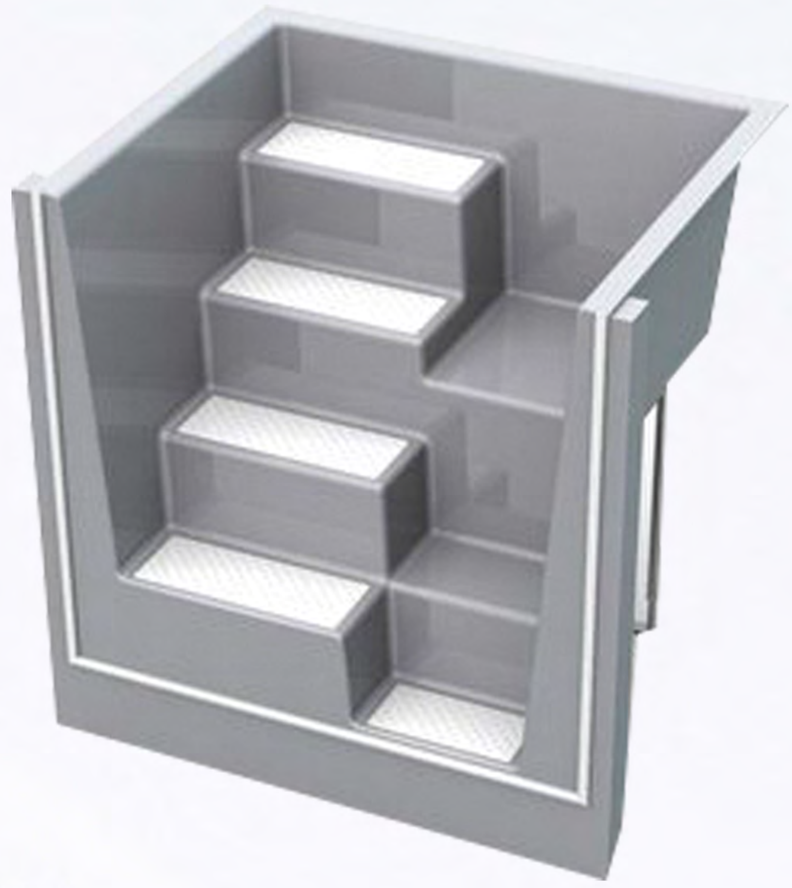

KANTO STAIRS KANTO MERDİVEN

POLYETHYLENE FORM POLIETILEN FORMDA

Descriptions

The "Kanto 150 N" model consists of five steps and two seating steps for relaxed sitting in your swimming pool. It has a width of 150 cm, which gives it its name. It is an intermediate – wall – mounting element, which is attached to your pool. It can be attached to your GSA pool and can also be fitted with an air jet if desired.

Technicial Specifications

Dimensions L x W x D: 1.165 × 1.500 × 1.500mm
Transport weight: 86 kg

KOD CODE	MODEL MODEL	BASAMAK STEP NUMBER	AĞIRLIK WEIGHT	EBAT SIZE
-	Kanto	5	50	116,5 × 150 × 150

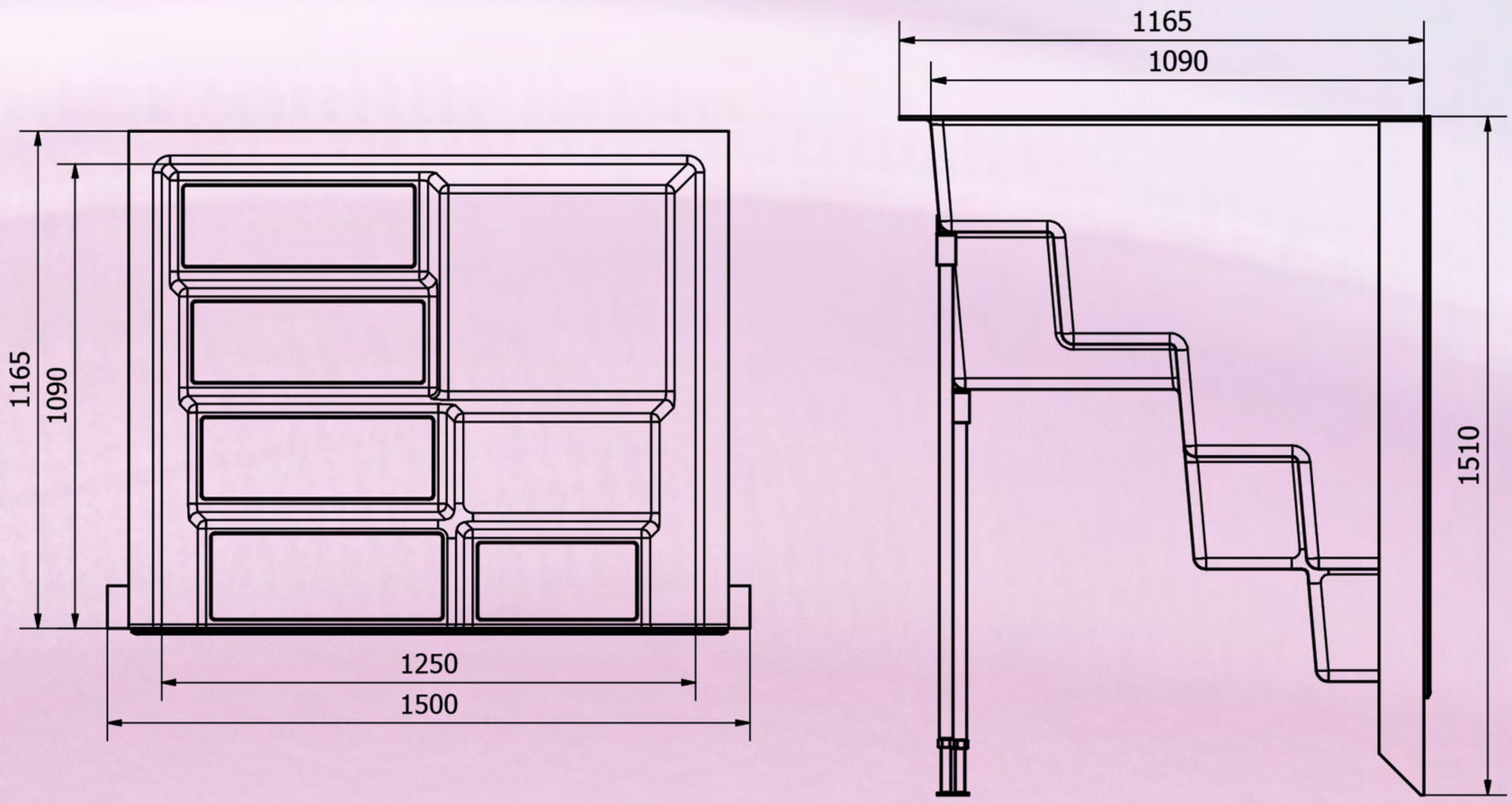

2 YEARS WARRANTY



ENGINEERED IN TURKEY

LONG LOSTING

ANTI BACTERIAL

POLYESTER LADDER
FOR SWIMMING POOL

Descriptions

The polyester ready-made stairs stand for design, quality and functionality. They are handcrafted from high quality epoxy acrylate and fiberglass made.

Universal stairs are created in such a way
that they are suitable for new pool projects as well as for renovations or retrofits are suitable. As a free-standing, modern design element, it also stands for absolute functionality and stability.

Even if it looks very filigree, it can carry up to approx. 250 kg.
In addition, the stairs have a ramp. This prevents
a stuck semi-automatic and fully automatic pool robot.

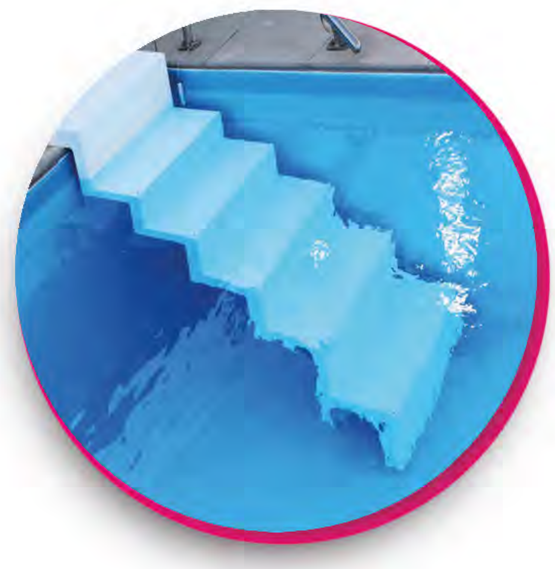

Color Selection

We recommend contrasting steps in foil color and the
To take the base color of the stairs as a contrast in another color

now with more color options







ESCADA ROMAN

STEEL STAINLESS

Descriptions

The steel stairs developed for BRT pools are very easy to install, more resistant, avoid the inconveniences of traditional stairs in blocks, acrylic or fiberglass and ensure perfection in aesthetics and beauty of the pool.

The option for this type of stairs allows an equal and uniform finish throughout your pool, either in standard, reinforced liner or glass mosaic finish.

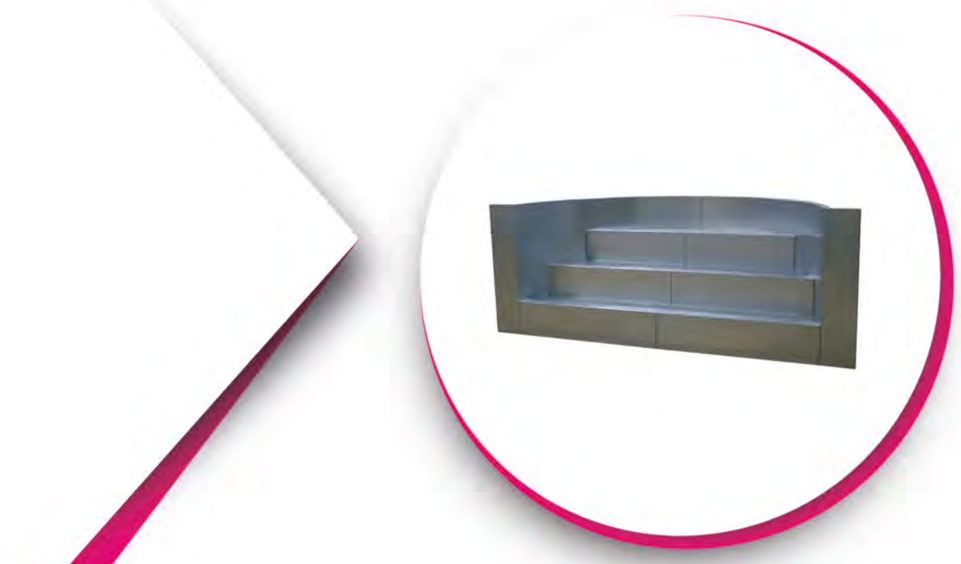



ESCADA ROMAN SQUARE

STEEL STAINLESS

Descriptions

The steel stairs developed for BRT pools are very easy to install, more resistant, avoid the inconveniences of traditional stairs in blocks, acrylic or fiberglass and ensure perfection in aesthetics and beauty of the pool.

The option for this type of stairs allows an equal and uniform finish throughout your pool, either in standard, reinforced liner or glass mosaic finish.

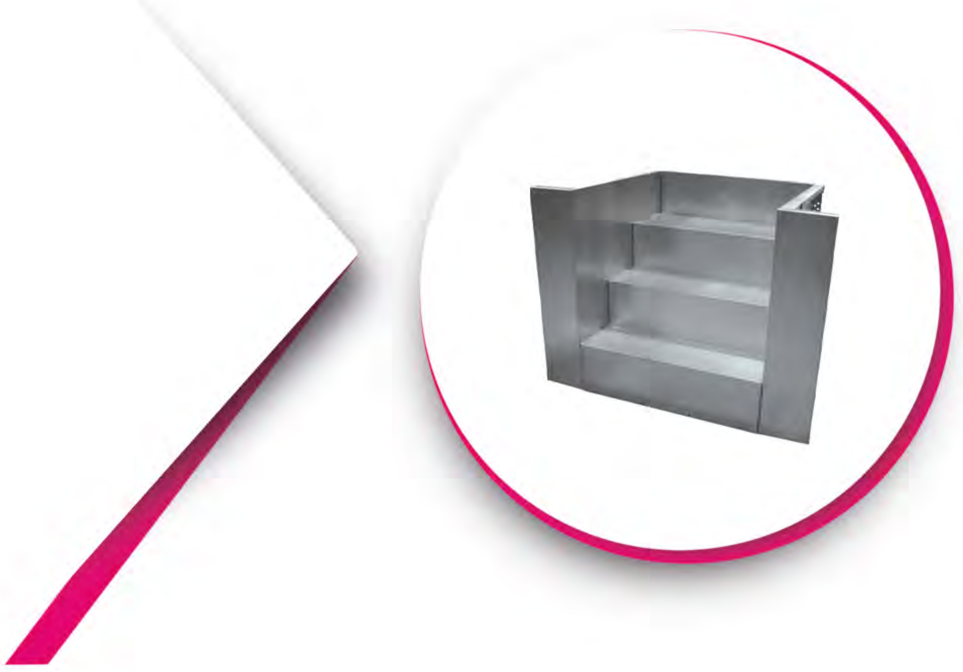



REVENNA CORNER

STEEL STAINLESS

Descriptions

The steel stairs developed for BRT pools are very easy to install, more resistant, avoid the inconveniences of traditional stairs in blocks, acrylic or fiberglass and ensure perfection in aesthetics and beauty of the pool.

The option for this type of stairs allows an equal and uniform finish throughout your pool, either in standard, reinforced liner or glass mosaic finish.

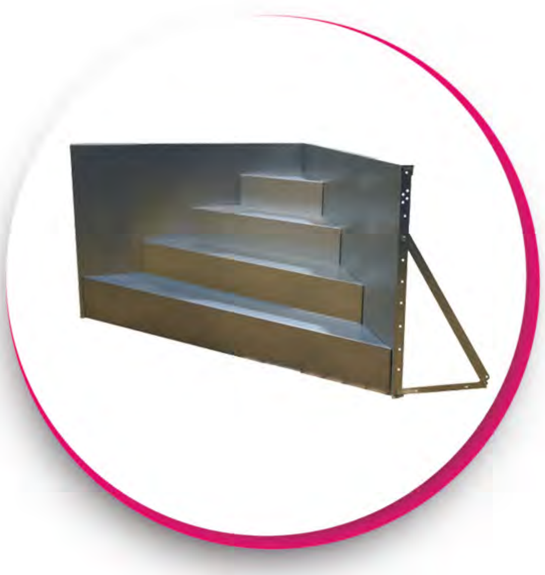



KANTO GALVO

STEEL STAINLESS

Descriptions

The steel stairs developed for BRT pools are very easy to install, more resistant, avoid the inconveniences of traditional stairs in blocks, acrylic or fiberglass and ensure perfection in aesthetics and beauty of the pool.

The option for this type of stairs allows an equal and uniform finish throughout your pool, either in standard, reinforced liner or glass mosaic finish.



7 SHOWERS



VOGUE

- PERFECT DESIGN
- ECO FRIENDLY
- STEEL STAINLESS
- MORE HEAD OPTIONS



FLAT

- PERFECT DESIGN
- ECO FRIENDLY
- STEEL STAINLESS



HERA

- PERFECT DESIGN
- ECO FRIENDLY
- STEEL STAINLESS



ECO GARDEN

- PERFECT DESIGN
- ECO FRIENDLY
- MORE COLOR OPTIONS



LUXURY STELLA

- PERFECT DESIGN
- ECO FRIENDLY
- STEEL STAINLESS



LUXURY ZIN

- PERFECT DESIGN
- ECO FRIENDLY
- STEEL STAINLESS



SOLAR

- PERFECT DESIGN
- ECO FRIENDLY
- MORE COLOR OPTIONS

MADE IN

BRT

POOL PRODUCTION FOCUS

ITALY

VOGUE SERIES VOGUE SERİSİ

SHOWERS DUŞLAR

Applications

- Suitable for villa type and commercial pools
- Made of AISI 304 & 316 stainless steel
- With shower nozzle, shower body and mounting elements









SHOWERS

MADE IN BRT POOL PRODUCTION FOCUS MADE IN

FLAT SERIES FLAT SERİSİ
SHOWERS DUŞLAR

Applications
- Suitable for villa type and commercial pools
- Made of AISI 304 & 316 quality stainless steel
- With shower nozzle, shower body and mounting elements





KOD CODE	MODEL MODEL	AISI AISI
-	Flat Series Stainless Steel	304 & 316

premium quality



HERA SERIES HERA SERİSİ
SHOWERS DUŞLAR

Technical data
- Made of 304 and 316 Quality Stainless Steel
- Satine Surface, Glossy Surface Option
- Floor Mounted And Movable Flange Closing Feature
- Timed or On-Off Tap is used according to demand.
- 304 Quality Stainless Steel, High Pressure Resistant Special Internal Flex Installation
- Stainless Steel Mounting and Connecting Screws
- Anti-Cream And Adjustable Shower Cap Or Fixed Shower Head Option
- Chrome Plated Faucet on Brass, Timed Bass and Metal Parts
- Product and Spare Parts Warranty Between 2 (Two) and 5 (Five) Years
- Changeable Dimensions with Order
- Concealed Water Inlet Under Plaster
- Easy Change Spare Parts



KOD CODE	MODEL MODEL	AISI AISI
-	Hera Series Stainless Steel	304 & 316

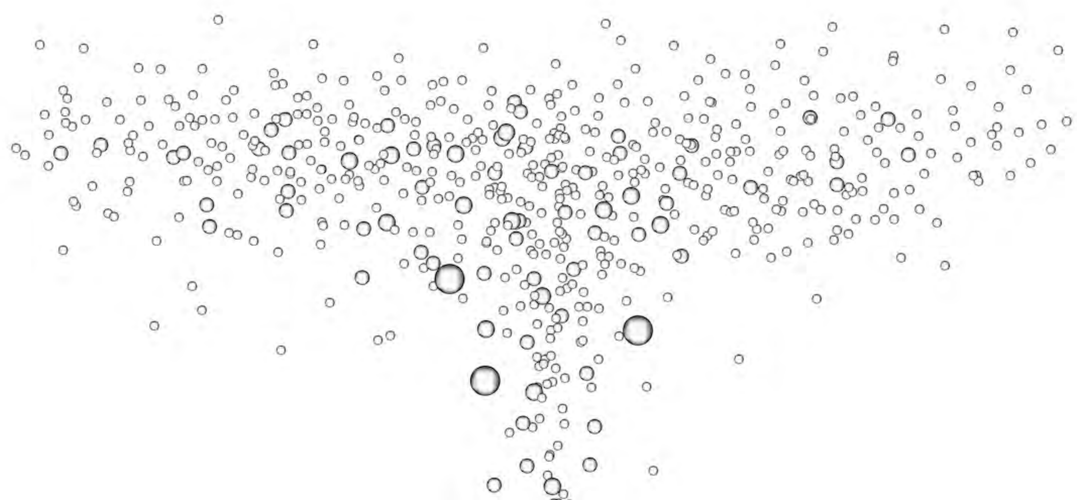





ECO GARDEN SERIES ECO GARDEN SERİSİ

SHOWERS DUŞLAR

Technical data

- There is a timed faucet system.
- It is mounted on the ground.
- It is coated with electrostatic powder paint on stainless steel.
- Open-close tap system.
- H: 212 cm. Body 13.5 cm.
- Head and foot wash.
- With bottom water inlet, it is mounted on the ground.

KOD CODE	MODEL MODEL	AISI AISI
-	Eco Garden Shower	304 & 316
-	Eco Garden Shower with Wooden Plate	304 & 316

WOODEN PLATE
80×80

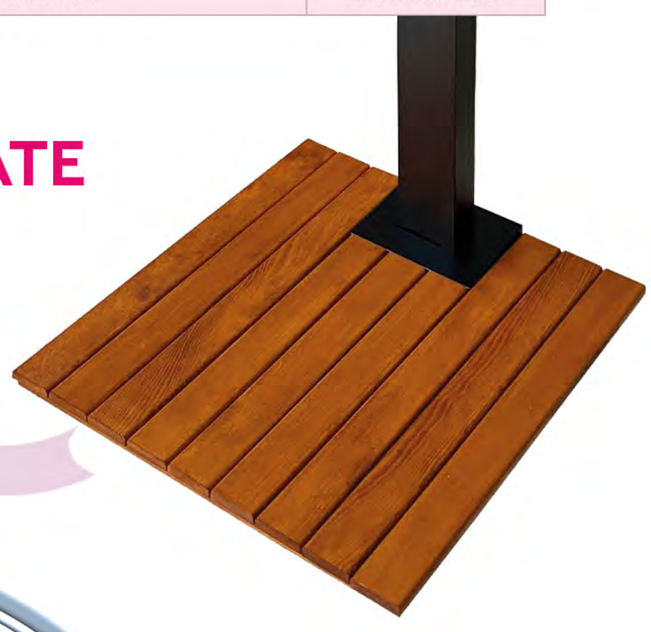

MADE IN BRT POOL PRODUCTION FOCUS MADE IN

SHOWERS





LUXURY STELLA SERIES LUXURY STELLA SERİSİ

SHOWERS DUŞLAR

Technical data

- 304 ss quality stainless pool shower is 220 cm long and can be connected to hot cold.
- Water outlet is provided from 3 different directions.

KOD CODE	MODEL MODEL	AISI AISI
-	Luxury Stella Series	304 & 316
-	-	-





LUXURY ZIN SERIES LUXURY ZIN SERİSİ

SHOWERS DUŞLAR

Technical data

- Electrostatic Anthracite textured painted pool shower on stainless steel.
- Height 110 cm. It is mounted on the ground. The water outlet is built-in.
- Hot cold battery.

KOD CODE	MODEL MODEL	AISI AISI
-	Luxury Zin Series	304 & 316
-	-	-

Eco Friendly

Energy Saving

Weather Conditions Resistant

Robust and Durable

Easy Setup





SOLAR SERIES SOLAR SERİSİ

SHOWERS DUŞLAR

Technical data

Black colored solar garden pool shower, made of polyethylene material, with hot and cold water valve and 20 lt and 18 lt water tanks heated by solar energy.

100% eco-friendly solar pool shower

The best-selling solar shower since its launch now features a more modern design, an increased tank capacity and new finishes.

Made of recyclable HDPE, the Solar Pool Shower 20 lt and 18 lt is equipped with a hot – cold mixer, foot rinse and a new, larger, more intense rain effect shower head.

It uses solar energy to heat the water. A straight connection to the cold water tap is sufficient. Solar energy starts to provide you with hot water from the first days of good weather.

It is sent as a package with anchor connections.

Use pressure reducer in places with high pressure.



KOD CODE	MODEL MODEL	AISI AISI
-	Solar Pool Shower 18 L	304 & 316
-	Solar Pool Shower 20 L	304 & 316


RAIN STYLE HEAD


HEAT SETTING


FOOT WASH


CONNECTOR

SHOWER
SWIMMING
POOL





3

PILLOWS & SUNBADS



MOOD POOL CUSHION

- INDOOR & OUTDOOR
- FOR SWIMMING POOL
- WATERPROOF FABRIC
- MORE COLOR OPTIONS



AIR POOL CUSHION

- INDOOR & OUTDOOR
- FOR SWIMMING POOL
- WATERPROOF FABRIC
- MORE COLOR OPTIONS



COMFORT POOL SUNBED

- POLYETHYLENE DESIGN
- PREMIUM MATERIAL QUALITY
- MORE COLOR OPTIONS



AQUA POOL SUNBED

- FIBER DESIGN
- USED IN SHALLOW POOL
- PREMIUM MATERIAL QUALITY
- MORE COLOR OPTIONS



LUX POOL SUNBED

- FIBERGLASS DESIGN
- 200KG CAPACITY
- BEST IN CLASS
- MORE COLOR OPTIONS

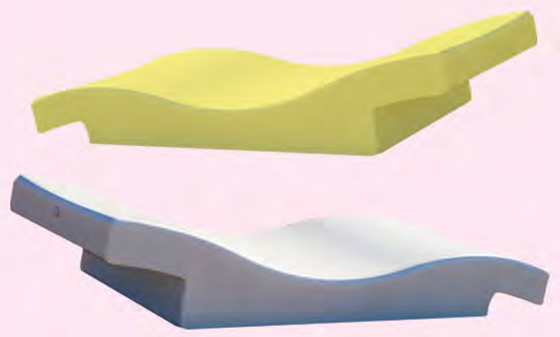

RELAX POOL SUNBED

- FIBEGLASS DESIGN
- ULTRA DURABLE MATERIAL
- USED IN AND OUT SIDE POOL
- MORE COLOR OPTIONS



RISING SERIES

- FIBERGLASS DESIGN
- OVAL LINES
- PREMIUM QUALITY



TABLES AND MORE

- POLYESTER DESIGN
- AND MORE

HIGH COMFORT



MOOD
POOL CUSHION

Technical data
It is made of water-repellent 3D mesh fabric. This ensures that the updo dries very quickly and is light. It is very easy to carry, easy to use, outdoors, on your terrace, balcony and even indoors.

The fabric is sewn with great care for a perfect result. A buttonhole on the side and buttons on the other 2 will allow you to put them together. Imagine how many of them you can put together!

Under the 3D mesh cover, you have a volume of padding enclosed in a fine synthetic fabric mesh, making the pool pouf removable.

The generous filling of raw polystyrene beads makes it a very high quality product.

15 colours: anthracite, red, anise green, eggplant, blue, orange, black, fuchsia pink, brick blue, jade green, cloud grey, navy blue, brown, sulfur yellow and mint green.

Usage
indoor, outdoor and swimming pool

Composition
3D mesh EPS balls with fireproof treatment

Quantity
300 liters

Network
Transparent to collect yourself.

MADE IN BRT POOL PRODUCTION FOCUS MADE IN

now with more color options 2



HIGH COMFORT



AIR
POOL CUSHION

Technical data
The BRT Pool is made of 3D mesh fabric that does not retain water: it passes through it. This allows the pouf to dry very quickly and to be light. So easy to move, easy to use outdoors, on your terrace, your balcony and even indoors.

The fabric is sewn with great care for a perfect finish. The Shelto +: a buttonhole on 2 sides and buttons on the other 2 sides will allow you to assemble them together. Imagine how many you will be able to put together!

Under the 3D mesh cover, you have a volume of filling enclosed in a fine synthetic fabric net and allows the pool beanbag to be removable.

Its generous filling of virgin polystyrene beads makes it a very good quality product.

Use
indoor, outdoor and swimming pool

Composition
3D Mesh fireproof treated EPS balls, quantity 300 liters

Net
Sheer to assemble yourself.

MADE IN BRT POOL PRODUCTION FOCUS MADE IN

now with more color options 2



POOL CUSHION

comfort

MODEL

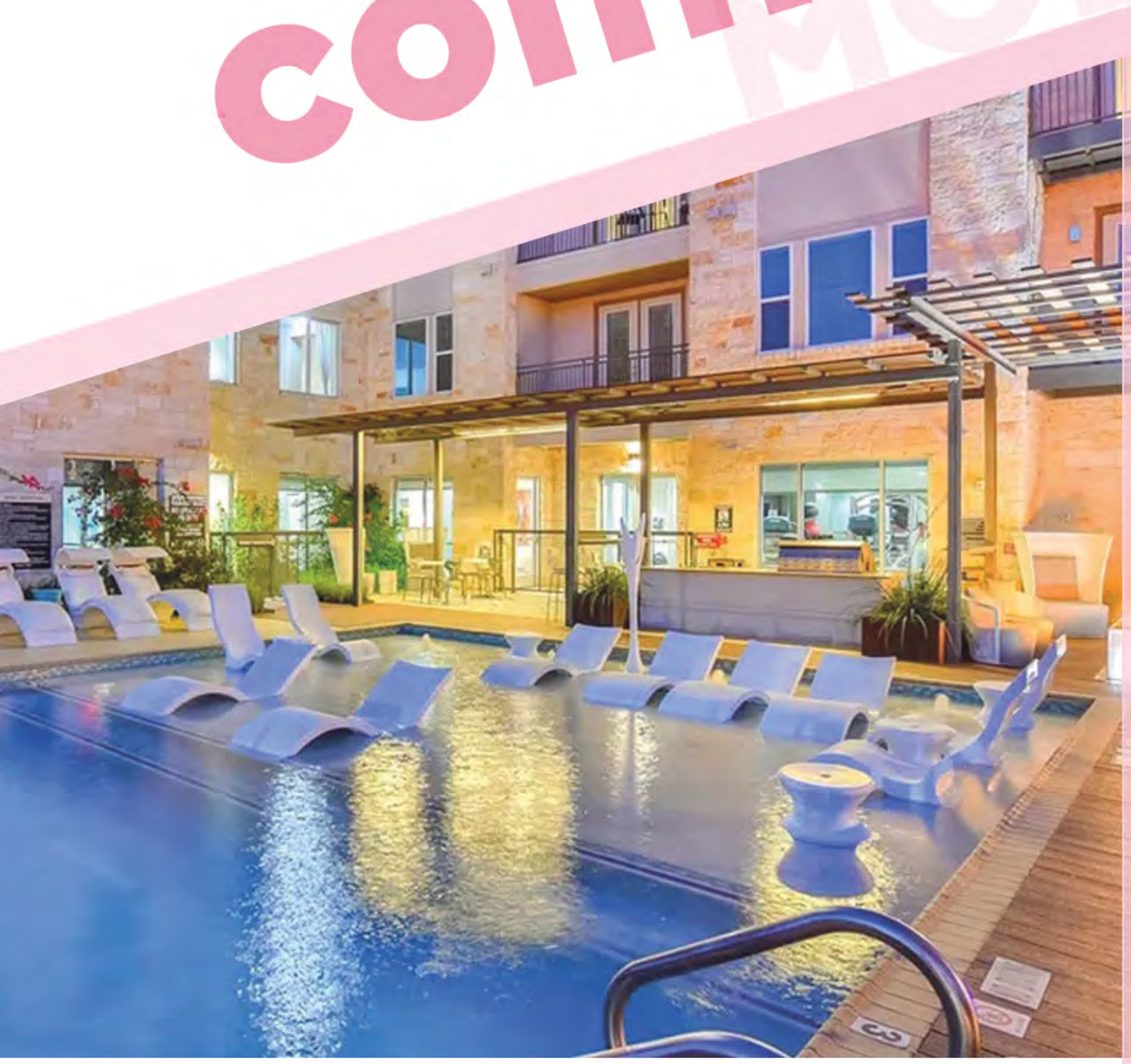

COMFORT
POOL SUNBED

Descriptions

The Sunbed, much like our original chaise, provides a comfortably contoured place to relax in-pool on your ledge in style. Designed to perform best on deeper ledges with water depths of 10–15 inches, the Sunbed will transform your tanning ledge into your new favorite place to soak up the sun.

Technical data

- Designed for in-pool or on-deck use
- Designed for 10–15 inches of water
- Built to withstand sun, weather, and chemicals of any pool or outdoor environment
- Compatible with all pool types, including vinyl
- Crafted of a high-quality, UV20 rated resin, color stabilized for up to 20,000 hours of direct sunlight
- Easy set up via threaded plug system
- Available in 9 colors

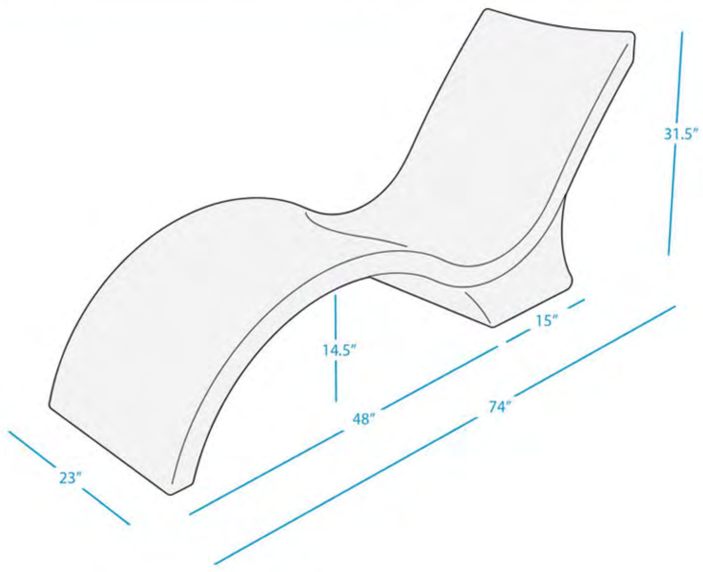

MADE IN BRT POOL PRODUCTION FOCUS MADE IN

now with more color options 2



POOL SUNBED

aqua



AQUA
POOL SUNBED

Descriptions

The Sunbed II is the original eye-catching Ledge Lounger design seen on pool ledges around the world. This water chair provides a comfortably contoured spot to relax on your ledge in style.

Technical data

- Designed for 0–9 inches of water
- Built to withstand sun, weather, and chemicals of any pool or outdoor environment
- Compatible with all pool types, including vinyl
- Crafted of a high-quality, UV20 rated resin, color stabilized for up to 20,000 hours of direct sunlight
- Easy set up via threaded plug system
- Available in 9 colors

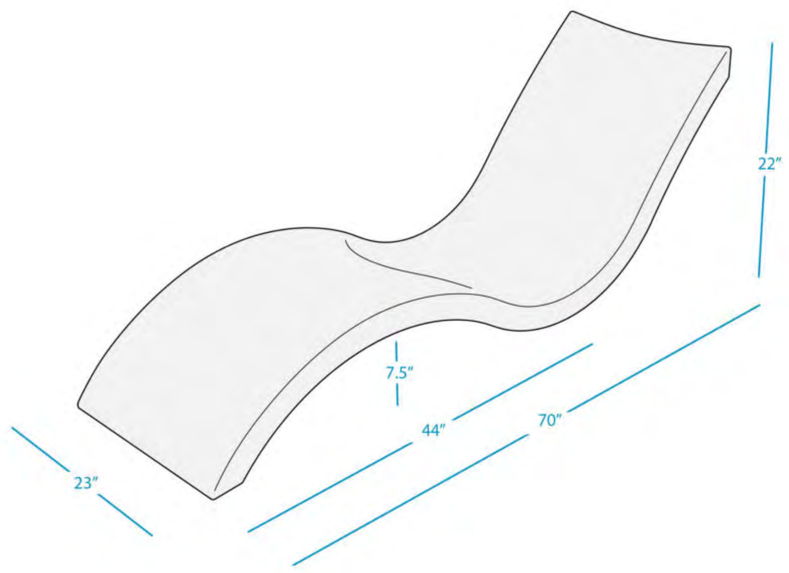

MADE IN BRT POOL PRODUCTION FOCUS MADE IN

now with more color options 2



MODEL
POOL SUNBED



LUX
POOL SUNBED

Descriptions

Its durability for many years compared to plastic sunbeds that break every year. Its color can be changed at any time. Its textured surface and modern lines give it a premium feel. Lightweight, portable and stockable.

Fiberglass chaise longue, produced from one piece, is made of Fiberglass material with rotation technique. It is 100% domestic production.

Technical data

- 100% Domestic Production
- 200 kg Carrying Capacity
- 6 mm Wall Thickness
- Fiberglass Material
- Special production
- En – Height: 185×63cm
- Height: 55cm
- Water Entry Level to Seating Point: 21 cm

MADE IN BRT POOL PRODUCTION FOCUS MADE IN

now with more color options 2

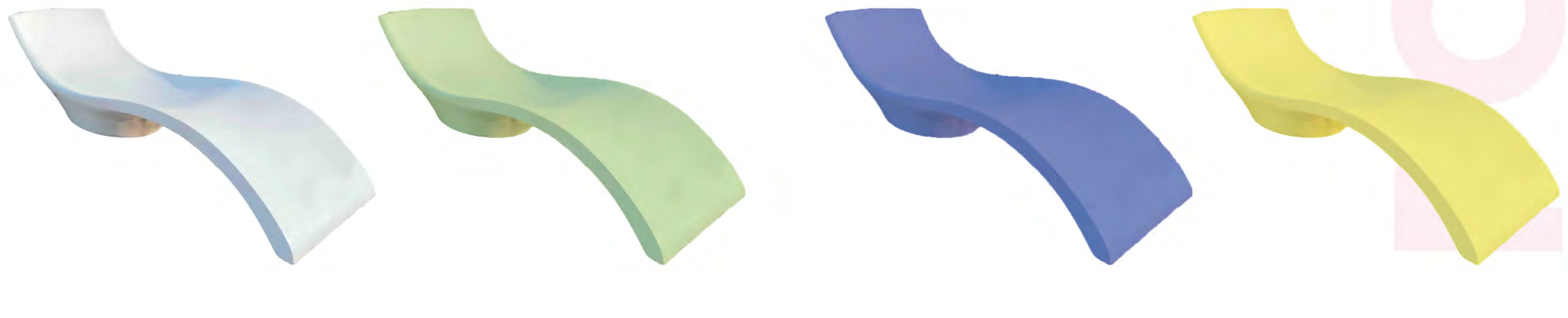

relax

MODEL





RELAX

POOL SUNBED

Descriptions

Fiberglass chaise lounges, fiber chaise lounges or polyester sun loungers, which we call fiber-reinforced polyester resin, are luxurious sun loungers with unique and aesthetic understandings in different designs and colors. Fiberglass sun loungers and side tables, which we have designed and manufactured for the first time in Turkey under the name of our "BRT" brand, stand out from their counterparts (wood, plastic, etc.) with their ability to make the dream of lying in the pool a reality.

Technical data

- Dimensions: 200cm*70cm*H37cm
- Material: Fiberglass
- Weight: 25kg

MADE IN BRT POOL PRODUCTION FOCUS MADE IN

POOL SUNBED

now with more color options 2





rising

MODEL



RISING

POOL SUNBED

Descriptions

Fiberglass chaise lounges, fiber chaise lounges or polyester sun loungers, which we call fiber-reinforced polyester resin, are luxurious sun loungers with unique and aesthetic understandings in different designs and colors. Fiberglass sun loungers and side tables, which we have designed and manufactured for the first time in Turkey under the name of our "BRT" brand, stand out from their counterparts (wood, plastic, etc.) with their ability to make the dream of lying in the pool a reality.

Technical data

- Dimensions: 200cm*70cm*H77cm
- Material: Fiberglass
- Weight: 30kg

MADE IN BRT POOL PRODUCTION FOCUS MADE IN

CODE	MODEL	PRICE
SUN021	POOL SUNBED MORE COLORS	€

now with more color options 2

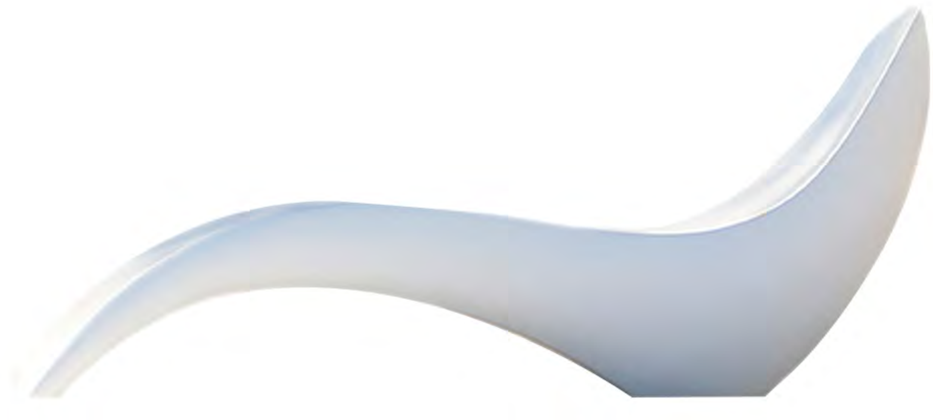



Keeping the Coolness Inside
Pool Table.





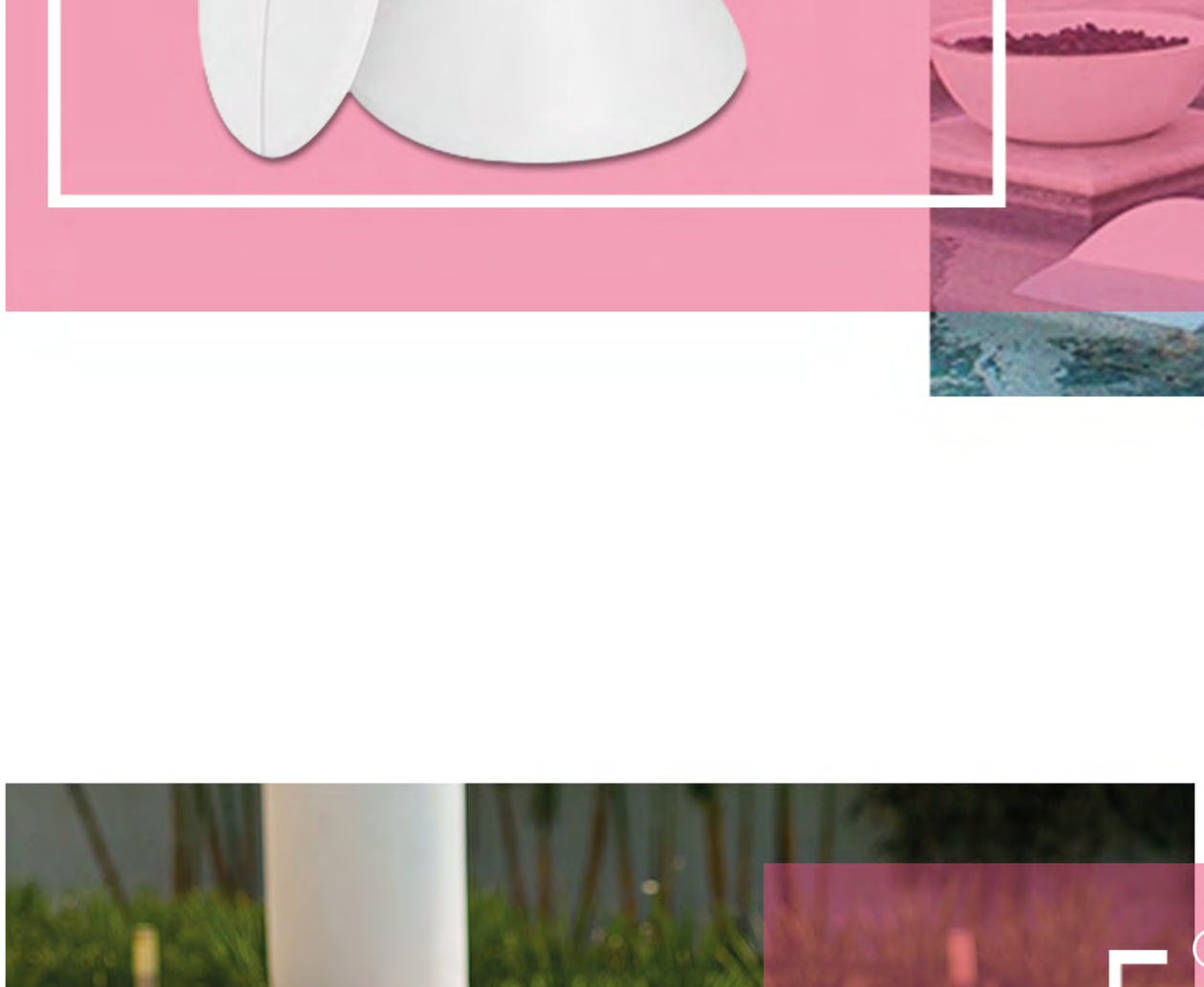

Chaise longue with head pillow
Enjoy the Pool.



WATER CURTAINS

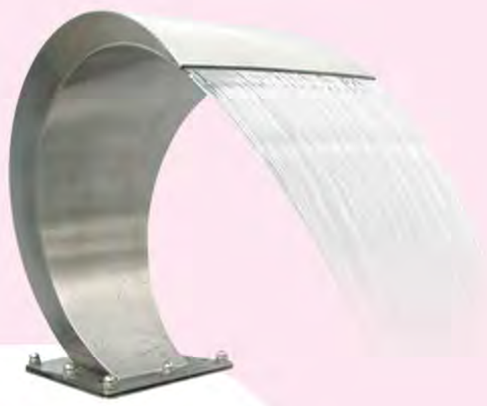

COBRA MODEL

- STEEL STAINLESS
- AISI 304 – 316 OPTIONS
- MINI, MIDI & MAXI SIZE



LUXURY MODEL

- STEEL STAINLESS
- AISI 304 – 316 OPTIONS
- MINI, MIDI & MAXI SIZE



SWAN TYPE

- STEEL STAINLESS
- AISI 304 – 316 OPTIONS
- MINI, MIDI & MAXI SIZE



PIPE TYPE

- STEEL STAINLESS
- AISI 304 – 316 OPTIONS
- MINI, MIDI & MAXI SIZE



MODERN TYPE

- STEEL STAINLESS
- AISI 304 – 316 OPTIONS
- MINI, MIDI & MAXI SIZE

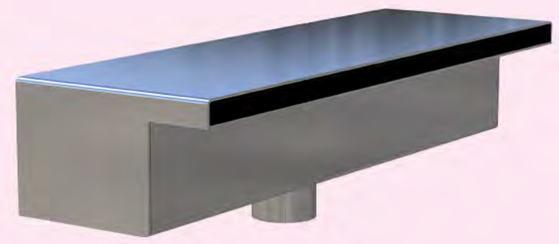

WALL TYPE

- STEEL STAINLESS
- AISI 304 – 316 OPTIONS

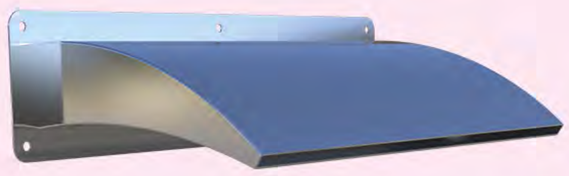

PORCH

- STEEL STAINLESS
- AISI 304 – 316 OPTIONS



ACRYLIC COBRA

- ACRYLIC DESIGN
- GOOD PERFORMANCE
- ECONOMY



LUXURY ACRYLIC COBRA

- ACRYLIC DESIGN
- GOOD PERFORMANCE
- RGB



COBRA MODEL
WATER CURTAINS

Descriptions

Mini, midi and maxi form options.
AISI 304 & 316 quality stainless steel.
1 1/2" & 2" internal thread connection.
Complete with fixing plate, gasket, screws and nuts.

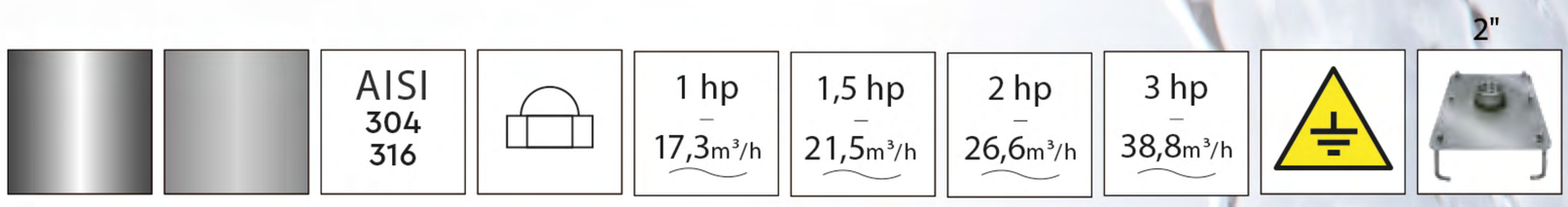

KOD CODE	MODEL MODEL	AĞIRLIK WEIGHT	EBAT SIZE
-	Cobra Mini	4,5 Kg	350 × 350 mm
-	Cobra Midi	11,5 Kg	500 × 600 mm
-	Cobra Maxi	16 Kg	900 × 600 mm

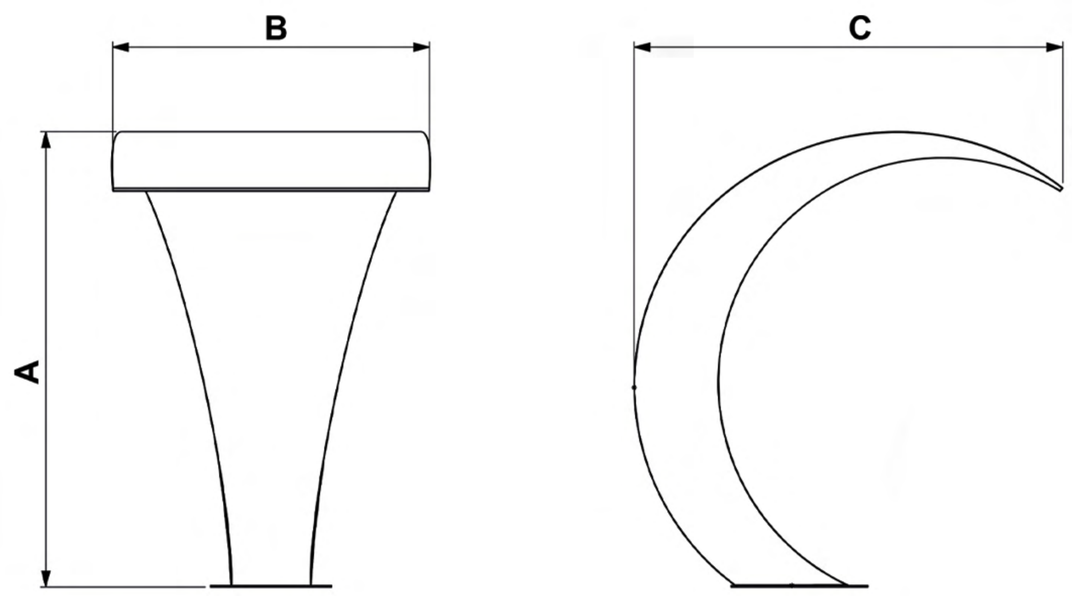

COBRA	A (mm)	B	C
Mini	350	350	370
Midi	600	500	570
Maxi	600	900	815



LUXURY MODEL
WATER CURTAINS

Descriptions

Mini, midi and maxi form options.
AISI 304 & 316 quality stainless steel.
1 1/2" & 2" internal thread connection.
Complete with fixing plate, gasket, screws and nuts.

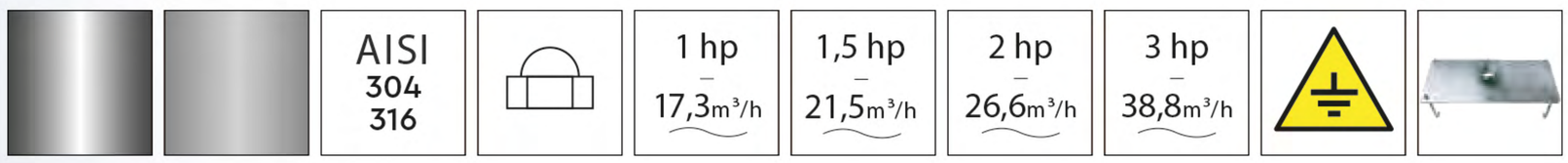

KOD CODE	MODEL MODEL	AĞIRLIK WEIGHT	EBAT SIZE
-	Luxury Mini	15 Kg	500 × 600 mm
-	Luxury Midi	20,5 Kg	700 × 600 mm
-	Luxury Maxi	28 Kg	1000 × 600 mm

LUXURY	A (mm)	B	C
Mini	500	600	640
Midi	700	600	640
Maxi	1000	600	640

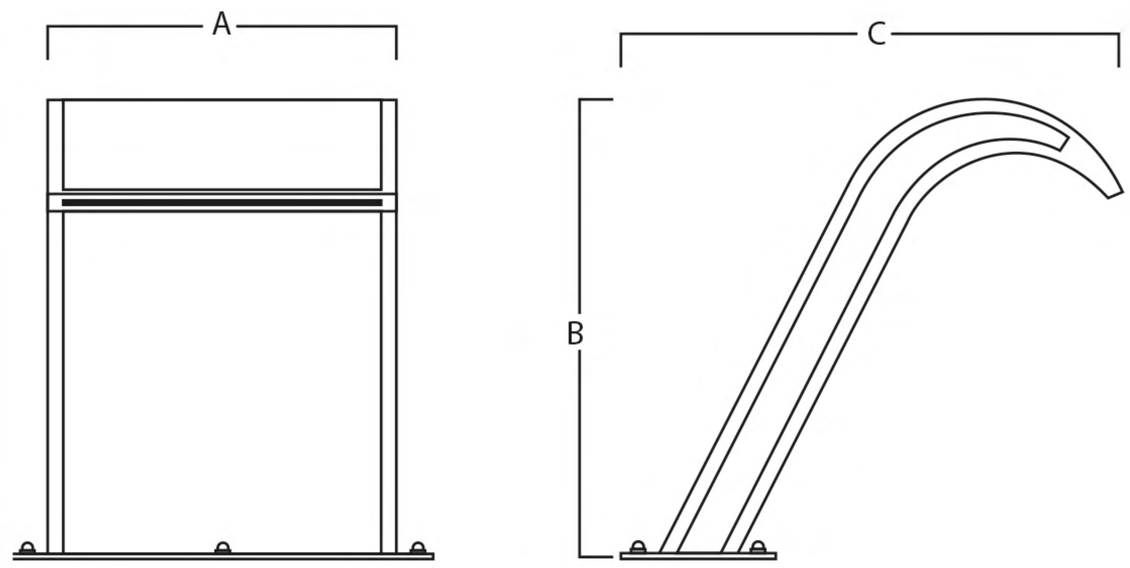



SWAN TYPE
WATER CURTAINS

Descriptions

Mini, midi and maxi form options.
AISI 304 & 316 quality stainless steel.
1 1/2" & 2" internal thread connection.
Complete with fixing plate, gasket, screws and nuts.

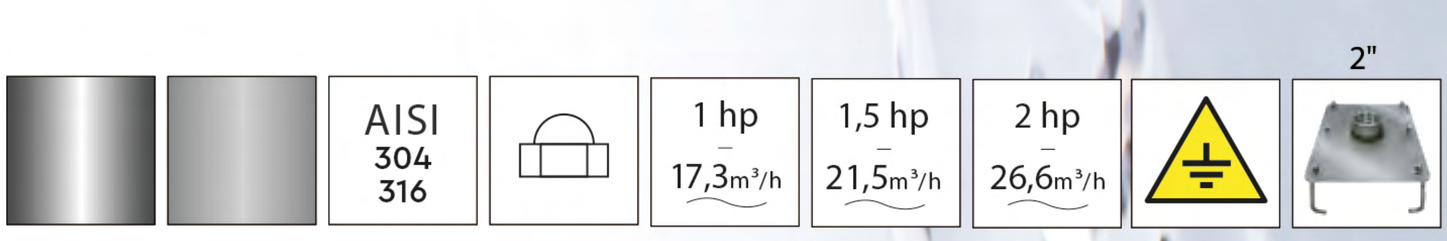

KOD CODE	MODEL MODEL	AĞIRLIK WEIGHT	EBAT SIZE
-	Swan Midi	5,5 Kg	400 × 600 mm
-	Swan Maxi	7 Kg	400 × 800 mm

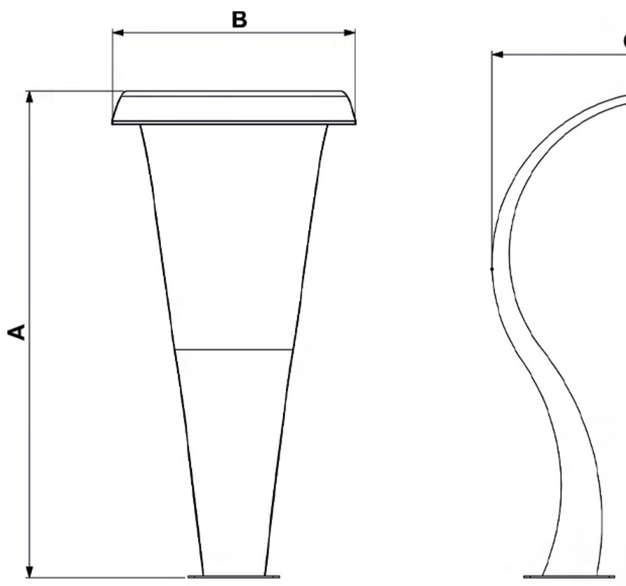

SWAN	A (mm)	B	C
Midi	600	400	350
Maxi	800	400	450



MODERN TYPE
WATER CURTAINS

Descriptions

Mini, midi and maxi form options.
AISI 304 & 316 quality stainless steel.
1 1/2" & 2" internal thread connection.
Complete with fixing plate, gasket, screws and nuts.

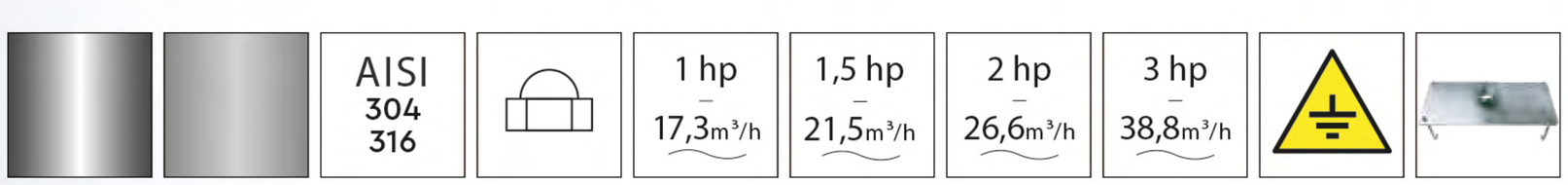

KOD CODE	MODEL MODEL	AĞIRLIK WEIGHT	EBAT SIZE
-	Modern Mini	29 Kg	500 × 700 mm
-	Modern Midi	38,5 Kg	700 × 700 mm
-	Modern Maxi	53 Kg	1000 × 700 mm

MODERN	A (mm)	B	C
Mini	500	700	360
Midi	700	700	360
Maxi	1000	700	360

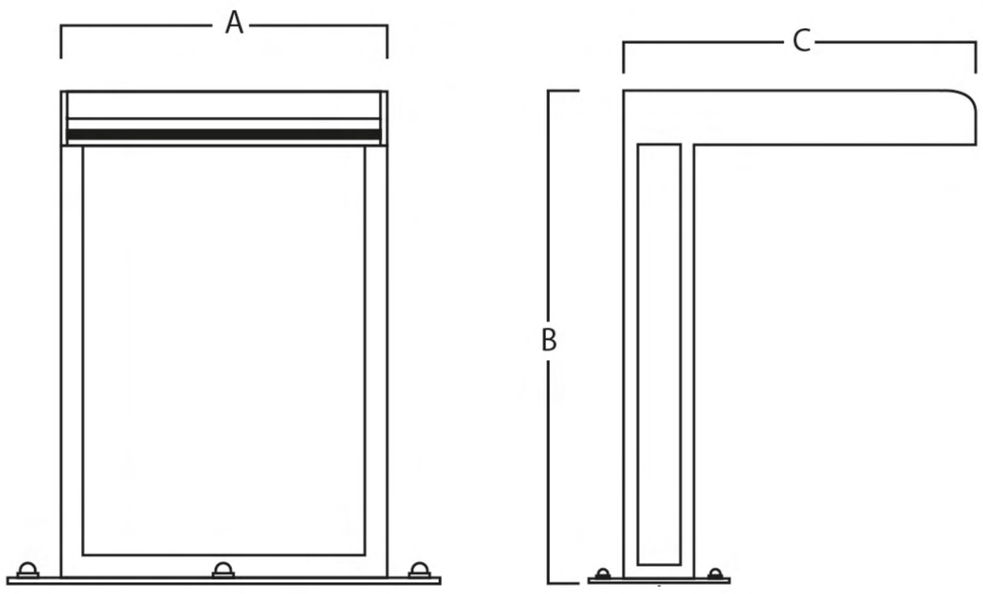



PIPE TYPE
WATER CURTAINS

Descriptions

AISI 304 & 316 quality stainless steel.

KOD CODE	MODEL MODEL	AĞIRLIK WEIGHT	EBAT SIZE
-	Pipe Type	-	500 × 1000
-	Pipe Type II	-	800 × 950



PIPE TYPE II
WATER CURTAINS



World Class Production



WALL TYPE
WATER CURTAINS

Descriptions

Made of AISI 304 quality stainless steel.
Connection 2 × 1 1/2" female threaded.
Complete with fixing plugs.

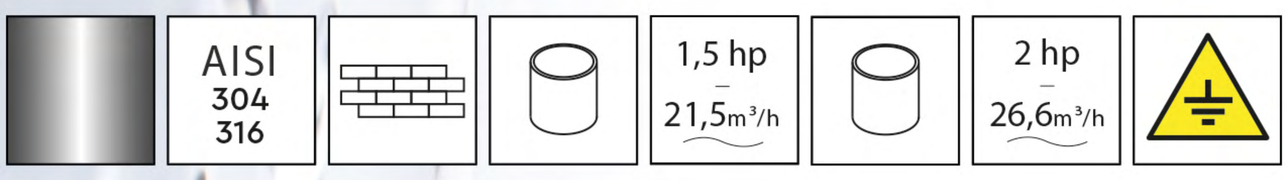

KOD CODE	MODEL MODEL	AĞIRLIK WEIGHT	EBAT SIZE
-	Wall Type Mini	6,5 Kg	500 × 100 mm
-	Wall Type Maxi	12,5 Kg	1000 × 100 mm

WALL TYPE	A (mm)	B	C
Mini	500	100	170
Midi	1000	100	170

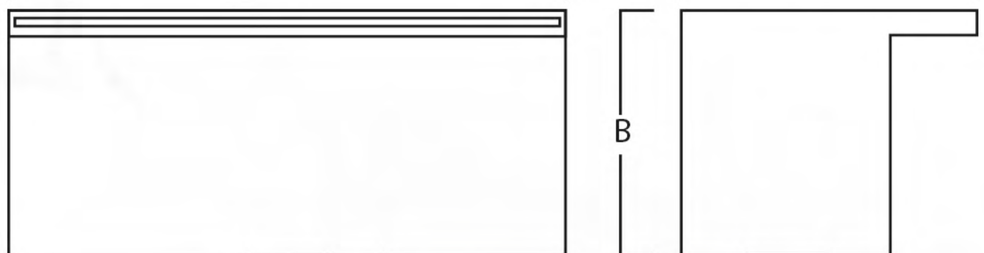



WALL TYPE II
WATER CURTAINS

Descriptions

Made of AISI 304 quality stainless steel.
Connection 2 × 1 1/2" female threaded.
Complete with fixing plugs.

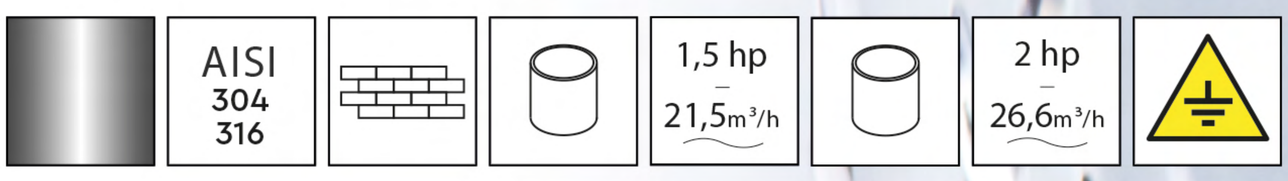

KOD CODE	MODEL MODEL	AĞIRLIK WEIGHT	EBAT SIZE
-	Wall Type II Mini	13 Kg	500 × 210 mm
-	Wall Type II Maxi	25 Kg	1000 × 210 mm

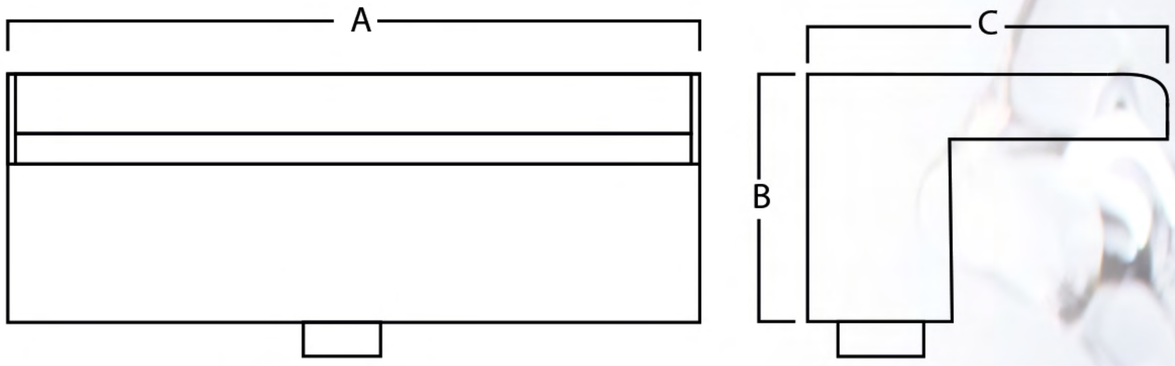

WALL TYPE II	A (mm)	B	C
Mini	500	210	360
Maxi	1000	210	360

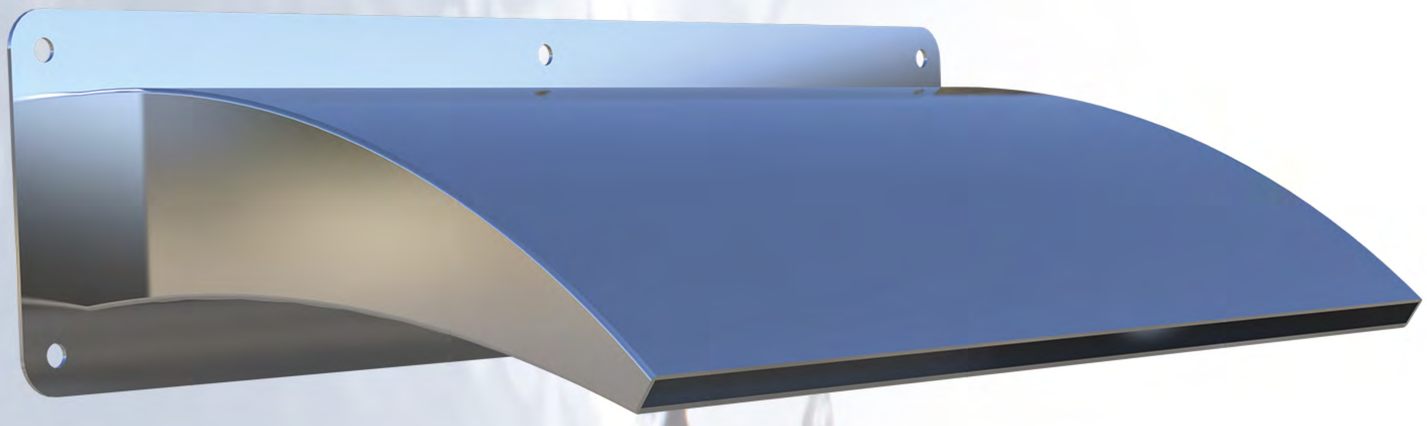

PORCH
WATER CURTAINS

Descriptions

Made of AISI 304 quality stainless steel.
Connection 2 × 1 1/2" female threaded.
Complete with fixing plugs.

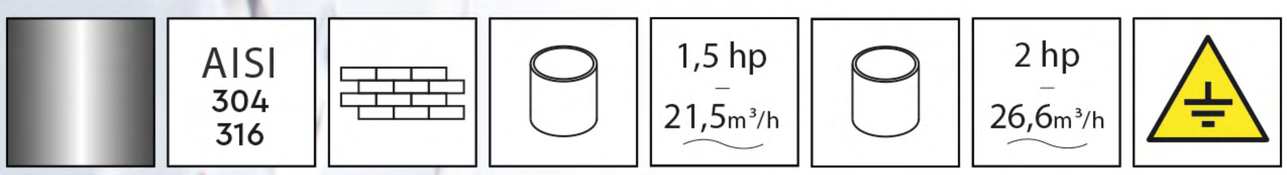

KOD CODE	MODEL MODEL	AĞIRLIK WEIGHT	EBAT SIZE
-	Porch Mini	6 Kg	500 × 140 mm
-	Porch Midi	8,5 Kg	700 × 140 mm
-	Porch Maxi	11,5 Kg	1000 × 140 mm

PORCH	A (mm)	B	C
Mini	500	140	270
Midi	700	140	270
Maxi	1000	140	270

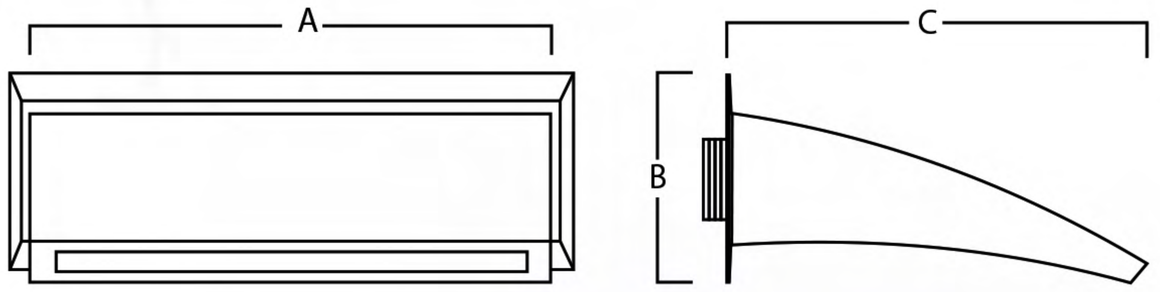

ACRYLIC COBRA

WATER CURTAINS

Descriptions

Made of transparent acrylic.
Complete with stainless steel bottom mounting plate, gasket, screws and nuts.



Water Curtains for Swimming Pool



LUXURY ACRYLIC COBRA
WATER CURTAINS

Descriptions

Made of transparent acrylic. Complete with stainless steel bottom mounting plate, gasket, screws and nuts.Different light animations are created with RGB LED.

Transformer remote control unit is not included in the price. Color change can be achieved with on-off.









Multi Color Options for Acrylic Water Curtains





10

CLEANING EQUIPMENTS

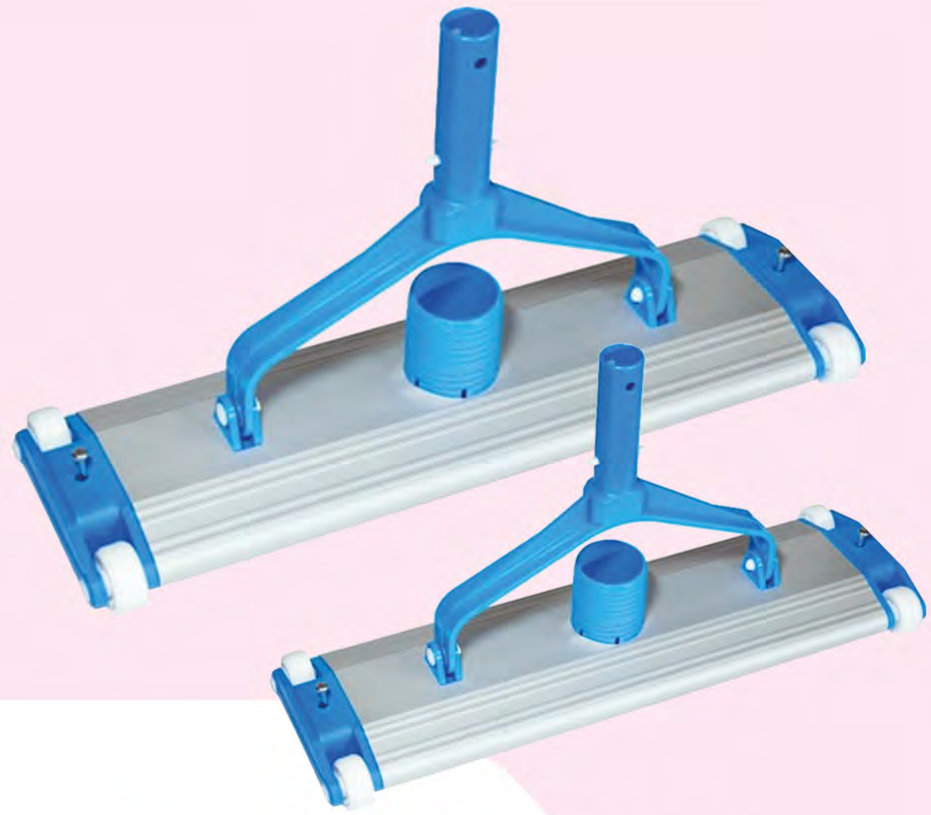

VACUUM CLEANERS

- ALUMINUM BROOM BODY
- FOR CONCRETE POOLS
- USED WITH POOL HOSE



CLEANERS LINER

- DESIGN FOR LINER
- EASILY CLEANS CORNERS
- PROTECTS POOL LINER



HOSE ROOLS

- MADE OF HIGH QUALIY
- UV RESISTANT POLYETHYLENE
- LONG LASTING



LEAF RAKES

- UV RESISTANT FRAME
- QUALITY & DURABLE LEAF
- IT COLLECTS DIRT EASILY





VACUUM CLEANERS
VAKUM SÜPÜRGELER

Technical data:

- Provides cleaning of the dirt that settles on the bottom of the pool
- Suitable for reinforced concrete pools
- It has an aluminum broom body
- Used with pool hose, union fittings and handle
- It has the optimum weight that does not tire the user and can sink to the bottom of the pool.

KOD CODE	MODEL MODEL	GENİŞLİK WIDTH	BAĞLANTI Ø CONNECTION Ø	EBAT SIZE
-	Flat 38.C Vacuum Cleaners Vakum Süpürgeler	36	1 ½"	0,32×0,51×0,13
-	Flat 50.C Vacuum Cleaners Vakum Süpürgeler	46	2"	0,32×0,51×0,13

SPARE PARTS
FLAT SÜPÜRGE YEDEK PARÇALARI



PLASTIC FORK
CODE: 198151220011 / MODEL: ½"
CODE: 19815122002 / MODEL: 2"



CONNECTION UNION FOR CLEANER
CODE: 19815123002
CODE: 19815123003



BRUSH
CODE: 19815123007
CODE: 19815123008



SIDE BODY FOR WHELL
CODE: 19815123001



FORK CONNECTION
CODE: 19815123004



WHEEL
CODE: 19815123005



BROOM WHEEL PIM
CODE: 19815123006



SEAL
CODE: 19815123009



BROOM FORK PIM
CODE: 19815123010

ECONOMIC LINER CLEANER HEAD
EKONOMİK LİNER SÜPÜRGE

CODE	MODEL	CONNECTION Ø	PRICE
950231	WF 82S	1 ½"	€



DELUXE LINER CLEANER HEAD
LÜKS LİNER SÜPÜRGE

CODE	MODEL	CONNECTION Ø	PRICE
950232	WF 32S	1 ½"	€



Technical data:
- Designed not to damage the liner surface
- It is suitable for standard telescopic handles, with clip-on type
- It has polypropylene brush
- Used with pool hose, union fittings and handle
- It has the optimum weight that does not tire the user and can sink to the bottom of the pool

DELUXE LINER CLEANER HEAD
LÜKS LİNER SÜPÜRGE

CODE	MODEL	CONNECTION Ø	PRICE
950233	WF 25S	1 ½"	€



Technical data:
- Designed not to damage the liner surface
- Triangular shape easily cleans corners
- Bumper perimeter protects pool liner
- It is suitable for standard telescopic handles, with clip-on type
- It has polypropylene brush
- Used with pool hose, union fittings and handle
- It has the optimum weight that does not tire the user and can sink to the bottom of the pool



TELESCOPIC CLEANER POLES
TELESKOPİK SÜPÜRGE SAPI

- Made of aluminum
- Thanks to the connection fittings, it can be adjusted to the desired length
- High strength bar does not bend during sweeping or brushing
- Soft handle doesn't hurt your hand

CODE	LENGTH mt	PRICE
590251	6	€
590252	9	€



VACUUM HOSE
SÜPÜRGE HORTUMU

- Made of high-quality, UV resistant polyethylene
- It is light, floating on water and does not sink
- It is flexible, allowing you to move comfortably while sweeping
- Long lasting

CODE	HOSE DIA Ø mm	LENGTH mt	PRICE
560251	38 mm – 1½"	10,5	€
560252	38 mm – 1½"	30	€



BRT MODEL HOSE
BRT MODEL HORTUM

CODE	HOSE DIA Ø mm	LENGTH mt	PRICE
550251	38 mm – 1½"	30	€
550252	50 mm – 2"	30	€

It is delivered with the union fittings



HOSE WITH MORE COLORS
BRT HORTUM RENKLİ

CODE	HOSE DIA Ø mm	LENGTH mt	PRICE
550253	38 mm – 1½"	30	€
550254	50 mm – 2"	30	€

now with more color options

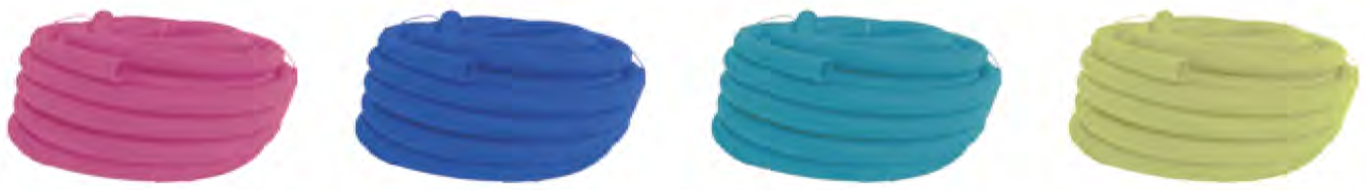

BRT TYPE II CLEANER HOSE ROLL
BRT TİP II SÜPÜRGE HORTUMU



- Made of UV resistant polyethylene
- It is light, floating on water and does not sink

CODE	HOSE DIA Ø mm	LENGTH mt	PRICE
570251	38 mm – 1 ½"	50	€
570252	50 mm – 2"	50	€

VACUUM HOSE CONE
SÜPÜRGE HORTUM KONİĞİ



- Suitable for 38 mm and 50 mm hose
- Thanks to its female threaded, it does not come out of the hose during vacuum

CODE	HOSE DIA Ø mm	PRICE
580251	50-63 Dili 50-63 Threaded	€

VACUUM HOSE CONE
SÜPÜRGE HORTUM KONİĞİ



- Suitable for 38 mm and 50 mm hose
- Mounted as male threaded

CODE	HOSE DIA Ø mm	PRICE
580252	50-63 Dili 50-63 Threaded	€

BARUT GROUP



ECONOMIC DEEP BAG RAKE
TARAKLI EKONOMİK MODEL

CODE	MODEL	PRICE
601951	Economic Deep Bag Rake	€



DELUXE DEEP BAG RAKE
TARAKLI LÜKS MODEL

CODE	MODEL	PRICE
601952	Deluxe Deep Bag Rake	€



STANDARD LEAF SKIMMER
STANDART MODEL KEPÇE

CODE	MODEL	PRICE
601953	Standart Leaf Skimmer	€



HEAVY DUTY PLASTIC LEAF SKIMMER
PLASTİK LÜKS MODEL KEPÇE

CODE	MODEL	PRICE
601954	Heavy Duty Plastic Leaf Skimmer	€



LEAF SKIMMER WITH ALUMINIUM POLE
ALÜMİNYUM TUTAMAKLI KEPÇE

CODE	MODEL	PRICE
601955	Leaf Skimmer With Aluminium Pole	€

CURVED PLASTIC
KIVRIK PLASTİK TELLİ

CODE	MODEL	LENGTH Cm	PRICE
555251	Curved Plastic Wire Bristle Head	45	€



CURVED PLASTIC ALUMINIUM BACK
KIVRIK PLASTİK TELLİ ALÜMİNYUM DESTEKLİ

CODE	MODEL	LENGTH Cm	PRICE
555252	Curved Plastic Wire Bristle Head Aluminium Back	45	€



WALL TYPE FLAT PLASTIC
DUVAR TİP DÜZ PLASTİK TELLİ

CODE	MODEL	LENGTH Cm	PRICE
555253	Wall Type Flat Plastic Wire Bristle Head	26	€



FLAT TYPE STAINLESS STEEL
DÜZ PASLANMAZ ÇELİK TELLİ

CODE	MODEL	LENGTH Cm	PRICE
555253	Flat Type Stainless Steel Wire Bristle Head	26	€



BARUT GROUP



ECONOMIC MODEL WITH ROPE
EKONOMİK MODEL İPİYLE BİRLİKTE

CODE	MODEL	PRICE
386101	Economic Model With Rope	€



DELUXE MODEL FLOATING WITH ROPE
LÜKS MODEL YÜZER, İPİYLE BİRLİKTE

CODE	MODEL	PRICE
386102	Deluxe Model Floating With Rope	€



JUMBO MODEL WITH ROPE
JUMBO MODEL İPİYLE BİRLİKTE

CODE	MODEL	PRICE
386103	Jumbo Model With Rope	€

DISINFECTION EQUIPMENT

ECO MODEL COLOR TYPE WITH ROPE
EKONOMİK MODEL RENKLİ İPİYLE BİRLİKTE

CODE	MODEL	PRICE
386104	Economic Model Color Type With Rope	€



ANIMAL FORM FLOATING WITH ROPE
HAYVAN MODELİ İPİYLE BİRLİKTE

CODE	MODEL	PRICE
386105	Animal Form Floating With Rope	€



ANIMAL FORM FLOATING WITH ROPE
HAYVAN FİGÜRÜ YÜZER İPİYLE BİRLİKTE

CODE	MODEL	PRICE
386106	Animal Form Floating With Rope	€



DELUVE FLOATING DIAL
PROFESYONEL TİP YÜZER

CODE	MODEL	PRICE
386107	Deluve Floating Dial	€



BARUT GROUP

ECO SET



ECONOMIC
POOL BUCKET



FLAT PLASTIC
CLEANING BRUSH



ECO
VACUUM CLEANER



BRT HOSE 7M
TELESCOPIC HANDLE
TEST KIT

PREMIUM SET



PREMIUM
POOL BUCKET



CURVED PLASTIC
CLEANING BRUSH



PREMIUM
VACUUM CLEANER



BRT HOSE 9M
TELESCOPIC HANDLE
TEST KIT

REVOLUTION SET



REVOLUTION
POOL BUCKET



REVOLUTION
CLEANING BRUSH



REVOLUTION
VACUUM CLEANER



BRT HOSE 12M
TELESCOPIC HANDLE
TEST KIT

BRT

POOL PRODUCTION FOCUS

11 ROBOTS



COSMY 100, 150, 200 & 250

▶ COSMY THE BOT, INTUITIVE AND USER FRIENDLY.
▶ GETS TO WORK AT THE PUSH OF A BUTTON.
▶ ERGONOMIC AND INTELLIGENT.
▶ FEATURING THE LATEST TECHNOLOGY,
▶ IT CLEANS MORE QUICKLY AND MORE EFFICIENTLY WHILE CONSUMING LESS ENERGY.



BWT P LINE

▶ THE P400 ROBOTIC POOL CLEANER OFFERS ONE 1.5 HOUR CLEANING CYCLE TO CLEAN THE POOL FLOOR.
▶ IT IS DESIGNED FOR POOLS UP TO 10 M LONG.



BWT CORDLESS PRO PK

▶ THE PRO PK MAX CORDLESS POOL VACUUM CLEANER OFFERS A RUN TIME OF 2 HOURS.
IT IS COMPATIBLE WITH ABOVE-GROUND AND IN-GROUND FLAT BOTTOM POOLS OF ANY SHAPE AND WITH ANY SURFACE FINISH.
▶ IT IS SUITABLE FOR POOLS WITH A SURFACE AREA OF UP 20 M2.

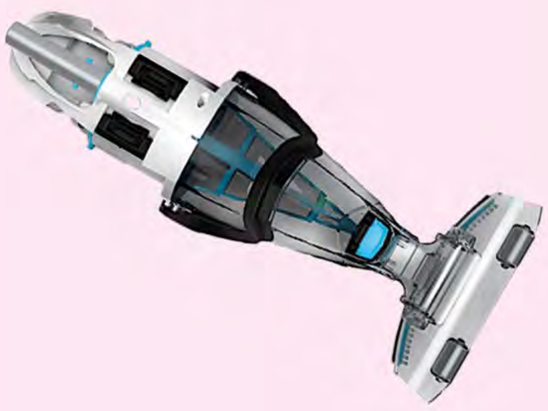

BWT PRO PK RECHARGEABLE POOL VACUUM CLEANERS

▶ THE BWT PRO PK GIANT RECHARGEABLE POOL VACUUM HAS A RUN TIME OF 75 MINUTES.
▶ IT OFFERS POWERFUL SUCTION AND FAST CLEANING OF AVERAGE TO LARGE SIZED ABOVE-GROUND AND IN-GROUND POOLS.



BWT B LINE

▶ POWERFUL, EFFICIENT, ERGONOMIC, SIMPLE TO USE AND EASY TO MAINTAIN.
▶ BWT B LINE ROBOTIC POOL CLEANERS OFFER HIGH PERFORMANCE, VISUAL APPEAL AND FUNCTIONALITY, ALL AT A VERY AFFORDABLE PRICE.



BWT D LINE

▶ POWERFUL, PRECISE, FAST ERGONOMIC, EXCELLENT GRIP ON ALL SURFACE FINISHES, SIMPLE TO USE AND EASY TO MAINTAIN.
▶ BWT D ROBOTIC POOL CLEANERS OFFER HIGH PERFORMANCE, VISUAL APPEAL AND FUNCTIONALITY.



BWT BC RECHARGEABLE POOL VACUUMS

▶ THE BWT BC02 RECHARGEABLE POOL VACUUM HAS A RUN TIME OF 30 MINUTES.
▶ IT IS PERFECT FOR CLEANING ABOVE-GROUND POOLS AND SPAS.



BWT MANGA

▶ PERFECT DESIGN
▶ ECONOMY
▶ HIGH TECHNOLOGY



BWT SUPER MANGA

▶ PERFECT DESIGN
▶ ECONOMY
▶ HIGH TECHNOLOGY

COSMY THE BOT 100





Pool size	For pools up to 8 m (all shapes and surface finishes)
Cleaning cycle duration	1.5 hours
Cleaning type	Pool floor
Filter type	Single filter
Brush type	PVC brushes
Cable length	12 m, floating cable
Dimensions (L x W x H)	39.5 x 36.5 x 20 cm
Weight	5.75 Kg
Power supply	29 Volt, Venus
Power consumption	150 Watt
Guarantee	2 years

Code	EAN13	Description	Quantity per pallet	Price ExVAT
125505479	7290114808705	BWT COSMY 100 robotic pool cleaner	24	Please inquire

COSMY THE BOT 150

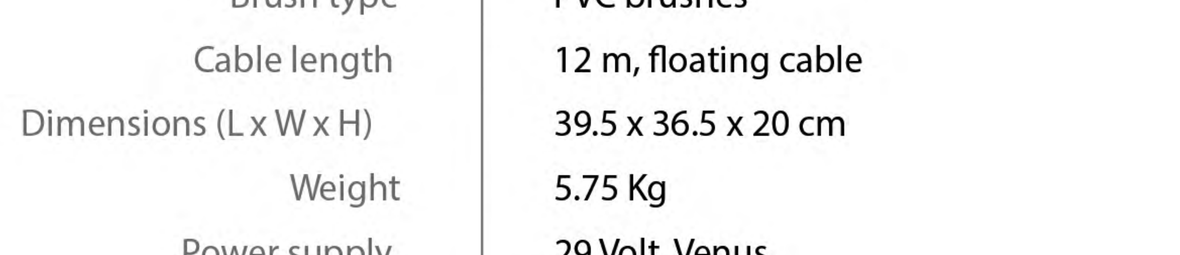



Pool size	For pools up to 10 m (all shapes and surface finishes)
Cleaning cycle duration	1h30
Cleaning type	Floor, walls & water line
Filter type	Single filter
Brush type	PVC brushes
Cable length	16 m, floating cable
Dimensions (L x W x H)	39.5 x 36.5 x 20 cm
Weight	5.75 Kg
Power supply	29 Volt, Venus
Power consumption	150 Watt
Guarantee	2 years

Code	EAN13	Description	Quantity per pallet	Price ExVAT
125505480	7290114808712	BWT COSMY 150 robotic pool cleaner	24	Please inquire



COSMY THE BOT 200

Pool size	For pools up to 12 m (all shapes and surface finishes)
Cleaning cycle duration	1.5, 2 or 2.5 hours
Remote control	Smartphone app
Cleaning type	Floor, walls & water line
Filter type	Double layer filtration
Brush type	PVC brushes
Cable length	16 m, floating cable
Dimensions (L x W x H)	39.5 x 36.5 x 20 cm
Weight	5.75 Kg
Power supply	29 Volt, Jupiter + APP
Power consumption	150 Watt
Guarantee	2 years



Code	EAN13	Description	Quantity per pallet	Price ExVAT
125505481	7290114808729	BWT COSMY 200 robotic pool cleaner	24	Please inquire



COSMY THE BOT 250

Pool size	For pools up to 12 m (all shapes and surface finishes)
Cleaning cycle duration	1.5, 2 or 2.5 hours
Remote control	Smartphone app
Cleaning type	Floor, walls & water line
Filter type	Double layer filtration
Brush type	PVC brushes
Cable length	18 m, floating cable
Dimensions (L x W x H)	39.5 x 36.5 x 20 cm
Weight	5.75 Kg
Power supply	29 Volt, Jupiter + APP
Power consumption	150 Watt
Guarantee	2 years + 1 additional year* *limited guarantee



Code	EAN13	Description	Quantity per pallet	Price ExVAT
125505482	7290114808736	BWT COSMY 250 robotic pool cleaner	16	Please inquire

P400 ROBOTIC POOL CLEANER





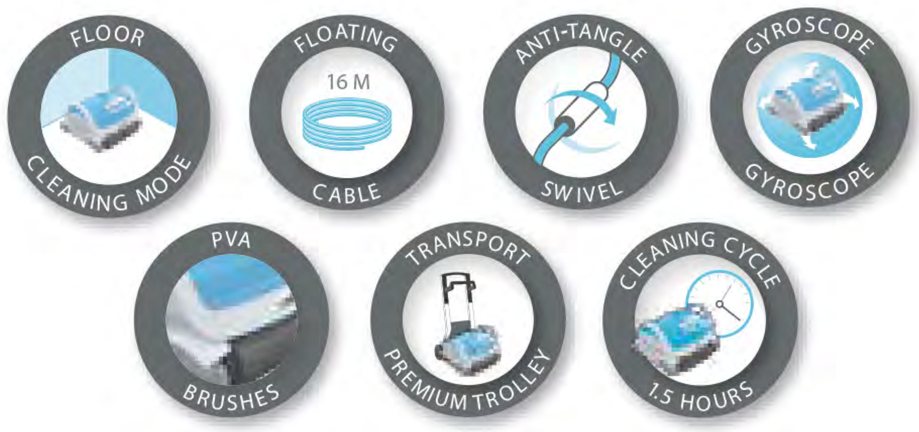

Pool size	Pools up to 10 m long (all shapes and surface finishes)
Cleaning type	Floor
Duration of the cleaning cycle	1.5 hours
Filter type	4D, hyperfine microfibre, transparent filter lid
Navigation system	Smart Navigation
Gyroscope	Yes
Suction intake rate	19m³/h
Cable length	16 m, high quality grey
Anti-tangle swivel	Yes
Dimensions (L x W x H)	35.1 x 43 x 27.8 cm
Weight	9.75 Kg
Storage accessory	High quality trolley
Guarantee	2 years

Code	Description	Quantity per pallet	Price ExVAT
125305505	BWT P400+ robotic pool cleaner	16	Please inquire

P500+ LITE ROBOTIC POOL CLEANER

NEW IN 2022







Pool size	For pools up to 12 m (all shapes and surface finishes)
Cleaning type	Floor, walls & water line
Duration of the cleaning cycle	2 hours
Navigation system	Smart Navigation
Gyroscope	Yes
Suction intake rate	19m³/h
Cable length	16 m,high quality grey
Anti-tangle swivel	Yes
Dimensions (L x W x H)	39.1 x 43 x 23.4 cm
Weight	11 Kg
Guarantee	3 years

Code	Description	Quantity per pallet	Price ExVAT
125505487	BWT P500+ LITE robotic pool cleaner	20	Please inquire

P500+ ROBOTIC POOL CLEANER



Pool size	For pools up to 12 m (all shapes and surface finishes)
Cleaning type	Floor, walls & water line
Duration of the cleaning cycle	2 hours
Filter type	4D, microfibre hyperfine, transparent filter lid
Navigation system	Smart Navigation
Gyroscope	Yes
Suction intake rate	19m³/h
Cable length	18 m,high quality grey
Anti-tangle swivel	Yes
Dimensions (L x W x H)	39.1 x 43 x 23.4 cm
Weight	11 Kg
Storage accessory	High quality trolley
Guarantee	3 years





Code	Description	Quantity per pallet	Price ExVAT
125305507	BWT P500+ robotic pool cleaner	16	Please inquire

P600 APP ROBOTIC POOL CLEANER



Pool size	For pools up to 15 m (all shapes and surface finishes)
Cleaning type	Floor, walls & water line
Duration of the cleaning cycle	1.5 hours, 2 hours, 2.5 hours
Remote control	Smartphone app
Filter type	4D, microfibre hyperfine, transparent filter lid
Navigation system	Smart Navigation
Gyroscope	Yes
Suction intake rate	19m³/h
Cable length	23 m,high quality grey
Anti-tangle swivel	Yes
Dimensions (L x W x H)	39.1 x 43 x 23.4 cm
Weight	11 Kg
Storage accessory	High quality trolley
Guarantee	3 years





Code	Description	Quantity per pallet	Price ExVAT
125305508	BWT P600+ APP robotic pool cleaner	20	Please inquire

BWT PRO PK MAX CORDLESS POOL CLEANER

Technical data

- No need for an electrical connection or cables close to the pool.
- The patented Stop & Go system turns the pool cleaner automatically on contact with the pool wall, optimising the cleaning time.
- Compatible with flat bottomed above-ground and in-ground pools, whatever the shape or surface finish.
- Long service life Lithium-ion rechargeable battery (4000mAh / 7.4V).
- Clipped brush and roller to help gather debris and improve cleaning efficiency.
- Easily adjustable inclined tubes to increase the downward pressure in order to maintain contact with the surface and optimise the cleaning path.
- WATER SENSOR. The motor only runs when submerged in water.
- LED indicator light shows the battery level.



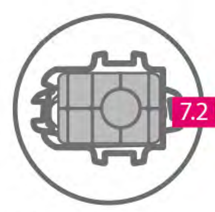

Filter capacity



Filtration flow rate

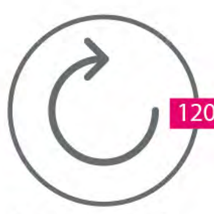

Cleaning cycle


STOP / GO automatic, with water sensor



Max pool length

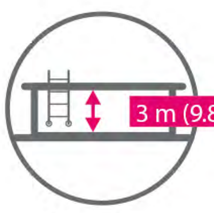

Cleaning depth

Code	EAN13	Description	Quantity per pallet	Price ExVAT
125503681	9010455010135	BWT PK MAX cordless pool cleaner	20	Please inquire

BWT PRO PK TURBO CORDLESS POOL CLEANER

Technical data

- Rapidly vacuums up debris in mid to large sized pool and tight spaces.
- Traps large volumes of leaves and fine particles.
- LED shows when the pool cleaner is ready to run/ running/ clogged/ needs to be charged.
- Safety mechanism: The blades stop moving automatically if the device is clogged.
- Ball bearing wheels for easy glide over all types of surface finishes.
- Bottom brushes to help dislodge dirt.
- Extra-large debris canister.
- Magnetic switch to ensure absolute water tightness.
- Robust, swivelling metallic handle.
- A storage bag is included.

- Compatible with above-ground and in-ground pools.
- Cordless and transportable,
- Rechargeable Lithium battery.
- Powerful suction.
- Automatic STOP/ GO with water sensor.
- Removable extensions to clean in tight spaces.
- Flexible extensions facilitate cleaning over curved pool surfaces.
- Connects to a standard telescopic pole (pole not included).

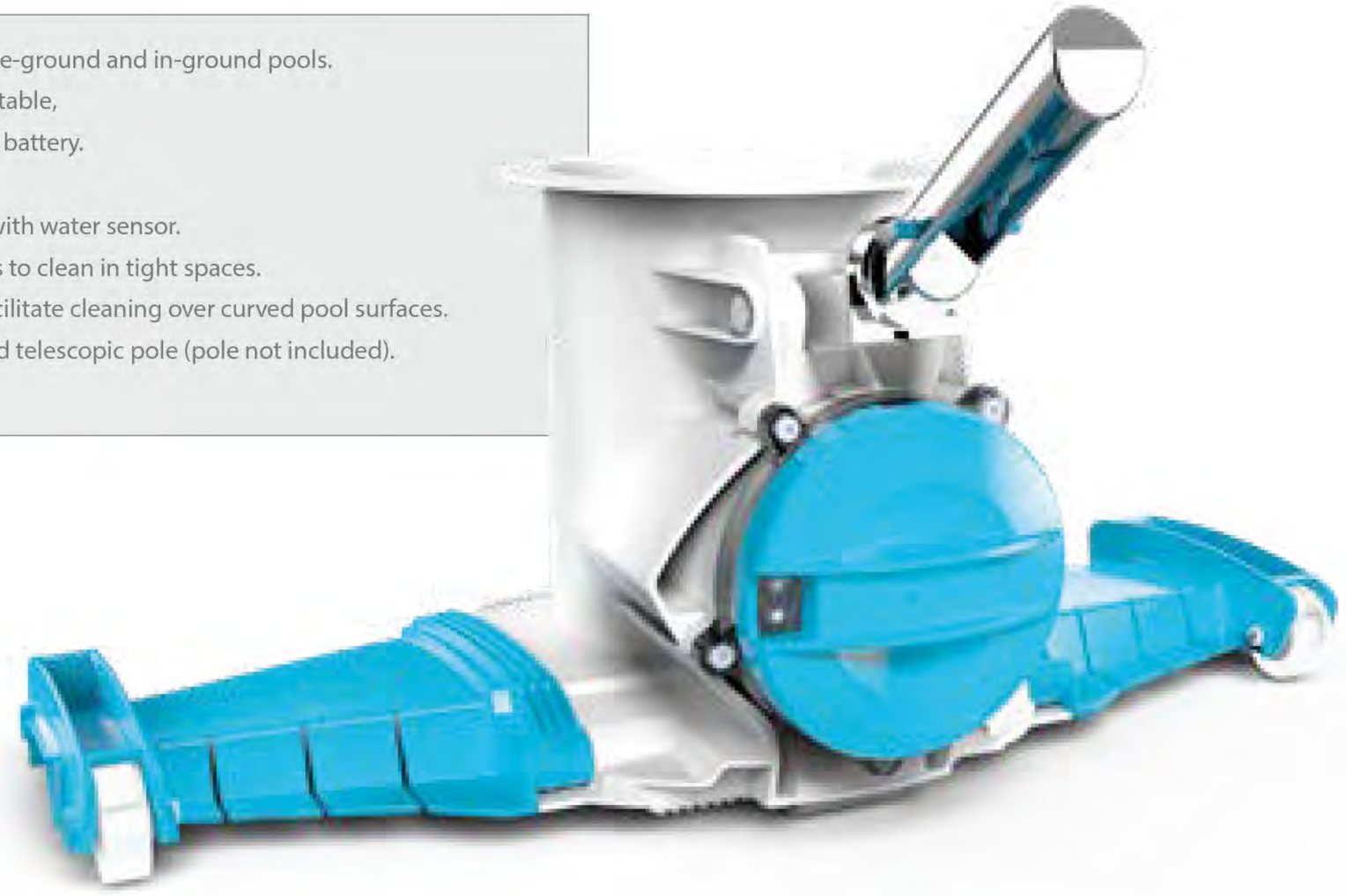

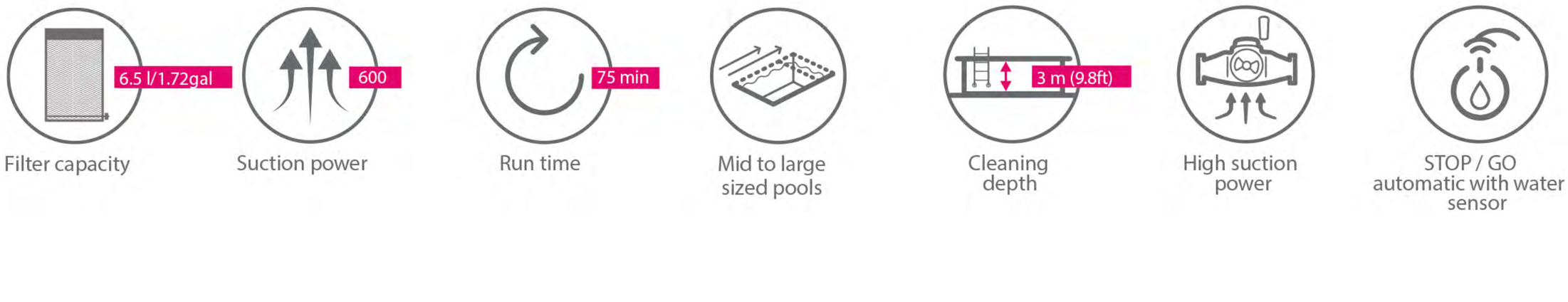

Code	EAN13	Description	Quantity per pallet	Price ExVAT
125503680	9010455010128	BWT PK TURBO battery run pool cleaner	20	Please inquire

BWT PRO PK GIANT RECHARGEABLE VACUUM CLEANERS

Technical data

- Rapidly picks up debris in mid sized pools.
- Fast, powerful cleaning.
- One vacuum cleaner for standard and fine cleaning.
- Simple latch opening system.
- Pleated filter cartridge with a large surface area for excellent filtration performance.
- Vacuums up fine sand and sediment from the pool floor.
- Features a quick drain system.
- A storage bag is included.

+

- Compatible with above-ground and in-ground pools.
- Cordless and transportable,
- Rechargeable Lithium battery.
- High suction power.
- Patented dual filtration system.
- Finely pleated filter cartridge – 50 micron,
- Standard stainless steel cartridge – 250 micron,
- Connects to a standard telescopic pole (pole not included).



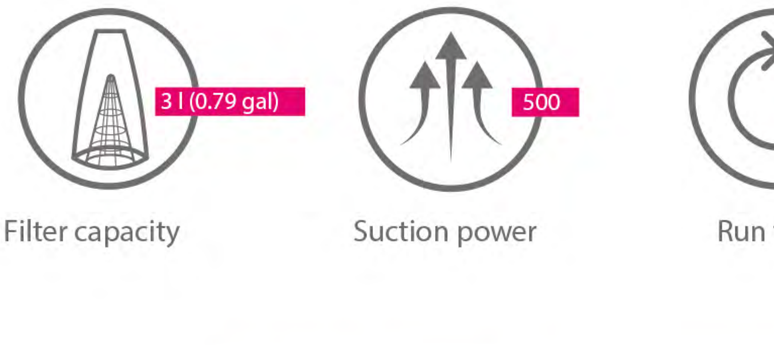

Filter capacity

Suction power

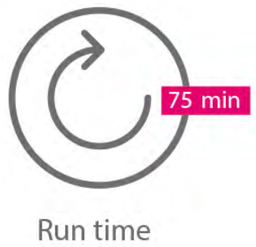

Run time



Mid to large sized pools



Cleaning depth



Code	EAN13	Description	Quantity per pallet	Price ExVAT
125503679	9010455010111	BWT PK GIANT battery powered cleaner	20	Please inquire

BWT PRO PK SWIFT RECHARGEABLE VACUUM CLEANERS

Technical data

- Rapidly vacuums up debris in mid to large sized pools.
- Fast, efficient cleaning.
- Picks up leaves and fine debris.
- Unique design for improved suction.
- Opens at the touch of a button.
- Features a quick drain system.
- Standard stainless steel filter.
- A storage bag is included.



- Compatible with above-ground and in-ground pools.
- Cordless and transportable.
- Rechargeable Lithium battery.
- Fine mesh filter.
- Magnetic switch to ensure absolute water tightness.
- Connects to a telescopic pole (pole not included).



Filter capacity



Suction power



Run time

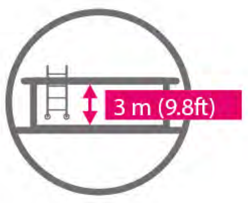

Cleaning depth


Mid-sized pools



Code	EAN13	Description	Quantity per pallet	Price ExVAT
125503677	9010455010098	BWT PK SWIFT battery powered cleaner	80	Please inquire

BWT PRO PK X-FLOW RECHARGEABLE VACUUM CLEANERS

Technical data

- Rapidly vacuums up debris in mid sized pools.
- Fast, efficient cleaning.
- Picks up leaves and fine debris.
- Unique design for improved suction.
- Extra-large debris canister.
- Magnetic switch to ensure absolute water tightness.
- Features a quick drain system.
- A storage bag is included.



- Compatible with above-ground and in-ground pools.
- Cordless and transportable.
- Rechargeable Lithium battery.
- Fine mesh filter bag.
- Hand grip facilitates removal of debris.
- Connects to a telescopic pole (pole not included).



Filter capacity



Suction power



Run time


Mid to large sized pools

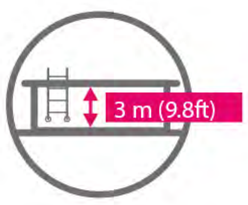

Cleaning depth



Code	EAN13	Description	Quantity per pallet	Price ExVAT
125503678	9010455010104	BWT PK X-FLOW battery powered cleaner	56	Please inquire

BWT B100 PLUS+ ROBOTIC POOL CLEANER





Pool size	For pools up to 8 m (all shapes and surface finishes)
Duration of the cleaning cycle	1.5 hours
Cleaning type	Pool floor
Brush type	4 PVA brush wheels + 1 rotating PVC brush
Filter type	4D, hyperfine microfibre, with transparent lid
Cable length	12 m,high quality grey
Height adjustable intake valves	Yes, the suction power can be imodulated
Dimensions (L x W x H)	35.5 x 41 x 24.6 cm
Weight	9.5 Kg
Guarantee	2 years

Code	EAN13	Description	Quantity per pallet	Price ExVAT
125505477	7290114808392	BWT B100 Plus + robotic pool cleaner	20	Please inquire

BWT B200 LITE ROBOTIC POOL CLEANER



Pool size	For pools up to 8 m (all shapes and surface finishes)
Duration of the cleaning cycle	1.5 hours
Cleaning type	Floor, walls & water line
Brush type	4 PVA brush wheels + 1 rotating PVC brush
Filter type	4D, hyperfine microfibre, with transparent lid
Cable length	12 m,high quality grey
Height adjustable intake valves	Yes, the suction power can be imodulated
Dimensions (L x W x H)	35.5 x 41 x 31.1 cm
Weight	10.5 Kg
Guarantee	2 years

Code	EAN13	Description	Quantity per pallet	Price ExVAT
125505478	7290114808279	BWT B200 Lite robotic pool cleaner	20	Please inquire

BWT B200 PLUS ROBOTIC POOL CLEANER





Pool size	For pools up to 8 m (all shapes and surface finishes)
Duration of the cleaning cycle	1h30 ou 2h00
Cleaning type	Floor, walls & water line
Brush type	4 PVA brush wheels + 1 rotating PVC brush
Filter type	4D, hyperfine microfibre, with transparent lid
Dispositif anti-torsion	Yes
Cable length	16 m,high quality grey
Height adjustable intake valves	Yes, the suction power can be imodulated
Dimensions (L x W x H)	35.5 x 41 x 31.1 cm
Weight	10.5 Kg
Guarantee	2 years

Code	EAN13	Description	Quantity per pallet	Price ExVAT
125305503	7290114800747	BWT B200 Plus robotic pool cleaner	20	Please inquire

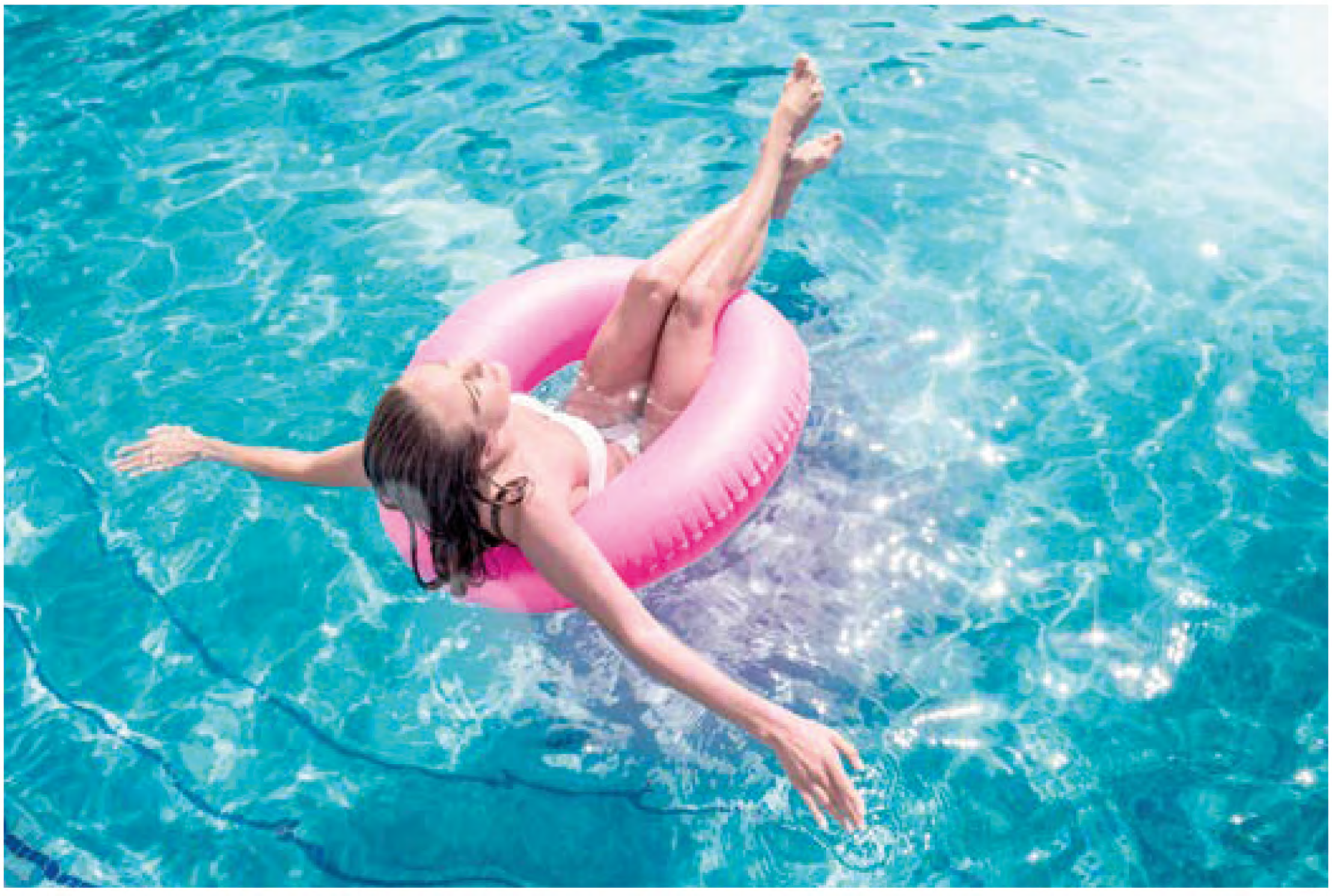

BWT D100 PLUS ROBOTIC POOL CLEANER



Pool size	For pools up to 8 m (all shapes and surface finishes)
Cleaning cycle duration	1.5 hours
Cleaning type	Pool floor
Brush type	2 PVA brushes + vibrating brush
Cable length	16 m,high quality grey
Height adjustable intake valves	Yes, the suction power can be modulated
Dimensions (L x W x H)	40.3 x 43.1 x 30.4 cm
Weight	10 Kg
Guarantee	2 years

Code	EAN13	Description	Quantity per pallet	Price ExVAT
125505483	7290114807722	BWT D100 Plus robotic pool cleaner	20	Please inquire

BWT D200 LITE ROBOTIC POOL CLEANER

NEW IN 2022



Pool size	For pools up to 10 m (all shapes and surface finishes)
Cleaning cycle duration	2 hours
Cleaning type	Floor, walls & water line
Brush type	4 PVA brushes + vibrating brush
Filter type	4D, microfibre hyperfine
Cable length	16 m,high quality grey
Height adjustable intake valves	Yes, the suction power can be modulated
Dimensions (L x W x H)	39.1 x 46.9 x 26.8 cm
Weight	11 Kg
Guarantee	2 years

Code	EAN13	Description	Quantity per pallet	Price ExVAT
125505484	7290114808286	BWT robot électrique D200 Lite	20	Please inquire

BWT D200 PLUS ROBOTIC POOL CLEANER





Pool size	For pools up to 10 m (all shapes and surface finishes)
Cleaning cycle duration	2 hours
Cleaning type	Floor, walls & water line
Brush type	4 PVA brushes + vibrating brush
Anti-tangle swivel	Yes
Cable length	18 m,high quality grey
Height adjustable intake valves	Yes, the suction power can be modulated
Dimensions (L x W x H)	39.1 x 46.9 x 26.8 cm
Weight	11 Kg
Storage accessory	Transport caddy
Guarantee	2 years

Code	EAN13	Description	Quantity per pallet	Price ExVAT
125505485	7290114807739	BWT D200 Plus robotic pool cleaner	16	Please inquire

BWT D300 PLUS APP ROBOTIC POOL CLEANER





Pool size	For pools up to 12 m (all shapes and surface finishes)
Cleaning cycle duration	1.5, 2 or 2.5 hours
Cleaning type	Floor, walls & water line
Brush type	4 PVA brushes + vibrating brush
Anti-tangle swivel	Yes
Cable length	23 m,high quality grey
Height adjustable intake valves	Yes, the suction power can be modulated
Storage accessory	Transport caddy
Dimensions (L x W x H)	39.1 x 46.9 x 26.8 cm
Guarantee	3 years

Code	EAN13	Description	Quantity per pallet	Price ExVAT
125305504	7290114800761	BWT Robot électrique D300 Plus APP	16	Please inquire

BWT BC20 RECHARGEABLE POOL & SPA VACUUM

Technical data

- Vacuums up debris from small pools and spas up to 3.7 m long.
- Transparent body to monitor filling of the debris canister.
- LED charging indicator light.
- Connects to a telescopic pole (not included).
- Flat brush, swivelling suction head.
- USB charging cable.
- One 250 micron Nylon filter, easy upkeep.



- Compatible with above-ground pools and spas.
- Cordless and transportable.
- Rechargeable Lithium battery.



Filter capacity



Filtration flow rate



Run time

Max pool volume



Code	EAN13	Description	Quantity per pallet	Price ExVAT
125300416	9010455007784	BWT BC02 Rechargeable Pool & Spa Vacuum	160	Please inquire

BWT BC30 RECHARGEABLE POOL & SPA VACUUM

Technical data

- Quickly picks up debris from all types of pools.,
- Quick drain valve.
- Corner brush and swivelling suction head.
- Connects to a telescopic pole (not included).
- Magnetic switch ensuring absolute water tightness.,
- 2 stainless steel filters, 125 and 250 micron, easy upkeep.



- Compatible with above-ground and in-ground pools and spas.
- Cordless and transportable.
- Rechargeable Lithium battery.
- High suction power.



Filter capacity



Suction power



Run time



Max pool length



Code	EAN13	Description	Quantity per pallet	Price ExVAT
125300417	9010455007791	BWT BC30 Rechargeable Pool & Spa Vacuum	80	Please inquire

BWT BC40 RECHARGEABLE VACUUM

Technical data

- Quickly picks up debris from all types of pools.
- An LED shows the status of the device; ready to run/ clogged/ needs to be charged.
- Safety mechanism, the blades stop automatically if the cleaner is clogged.
- Magnetic switch ensures absolute water tightness.
- Ideal for mid sized pools.
- Width of the vacuum head: 26.8 cm.

- Compatible with above-ground and in-ground pools and spas.
- Cordless and transportable.
- Rechargeable Lithium battery.
- High suction power.
- Connects to a telescopic pole (pole not included).





Filter capacity



Suction power



Run-time

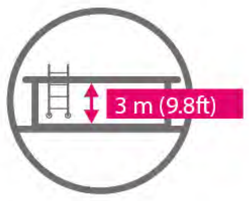

Cleaning depth



Code	EAN13	Description	Quantity per pallet	Price ExVAT
125503674	7290114800761	BWT BC40 rechargeable vacuum	80	Please inquire

BWT BC50 RECHARGEABLE POOL & SPA VACUUM

Technical data

- Quickly picks up debris from all types of pools.
- Magnetic switch ensures absolute water tightness.
- Large swivelling vacuum head and corner brush.
- Powerful motor.
- Connects to a telescopic pole (pole not included).
- 2 large capacity stainless steel filters, 125 and 250 microns, easy upkeep.

- Compatible with above-ground and in-ground pools and spas.
- Cordless and transportable.
- Rechargeable Lithium battery.
- High suction power.





Filter capacity



Suction power



Run time

Max pool volume



Code	EAN13	Description	Quantity per pallet	Price ExVAT
125300418	9010455007807	BWT BC50 rechargeable Pool & Spa Vacuum	56	Please inquire

Water sensor
Activates only when submerged in water

Roller
Rotates while the cleaner is moving to help capturing debris



MANGA™ +

Cordless Pool Robot

Rotating head
Less time needed to clean the pool







MANGA

FOR SWIMMING POOL

Technical data:

▶ Water Sensor : Motor activates only when it is submerged in water.
▶ Magnetic Switch : Absolute sealing to prevent water leakage.
▶ LED Battery Indicator : Lights up during robot operation, begins to blink when 10 minutes of usage remains.
▶ Bagless Debris Management : Spacious compartment to trap a sizable amount of debris with the
easy-to-clean stainless steel mesh.
▶ Compact : Compact and lightweight design allows effortless transportation in/out of pool.
▶ Trajectory Adjustment : Adjustable wheel axle to optimize cleaning path.
▶ Clip-on Roller and Brush : Help capturing debris to increase vacuuming efficiency.
▶ Pool Size : Recommended for pools up to 24ft / 7.3m in diameter or 45m2/ 484ft2 in total area.





CODE	MODEL	PRICE
12354456	BWT Manga	€

Voltage	Battery Type	Working Time	Charging Time	Flow Rate	Debris Capacity
7.4v	4.000 mAh	90 min	5-6h	71L / min	4.5L

MANGA™ S

Patented **"Stop & Go"** system



Roller

Rotates while the cleaner is moving to help capturing debris

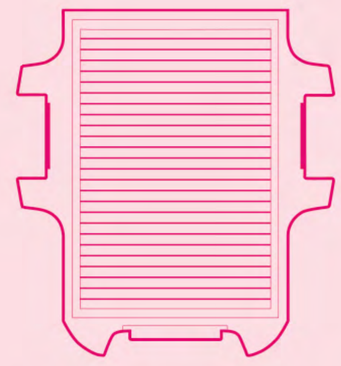

Fine Cartridge Filter





SUPER MANGA PLUS

FOR SWIMMING POOL

Technical data:

▶ Water Sensor
Motor activates only when it is submerged in water.
▶ Magnetic switch
Absolute sealing to prevent water leakage.
▶ LED Battery indicator
4 LED lights to indicate the battery level.
▶ Bagless Debris Management
Spacious compartment to trap a sizable amount of debris with the easy-to-clean stainless steel mesh.
▶ Compact
Compact and lightweight design allows effortless transportation in/out of pool.
▶ Trajectory adjustment
Adjustable jet tubes to optimize the cleaning path.
▶ Clip-on Roller and Brush
Help capturing debris to increase vacuuming efficiency.
▶ Pool Size
Recommended for pools up to 9m / 30ft in diameter or 65m² / 700ft² in total area.



CODE	MODEL	PRICE
12354458	BWT Super Manga Plus	€

Voltage	Battery Type	Working Time	Charging Time	Flow Rate	Debris Capacity
12v	4.000 mAh	120 min	5–6 h	77L / min	7.2L

HEALTH WITH SALT



12

DISINFECTION



AQUAWISE SEA

- PERFECT DESIGN
- GOOD PERFORMANCE
- ECONOMY



ASPENDOSE PR

- DIGITAL DISPLAY
- EASY MENU
- HIGH TECHNOLOGY



CONTROL DOSING PUMP

- PERFECT DESIGN
- GOOD PERFORMANCE
- ECONOMY



LIQUID KIT (pH/Cl) ECO

- FOR HYGIENE

aquawise

SEA 112 & SEA 124

SEA 136





BI POLAR CELL TECHNOLOGY

SMART SALT TECHNOLOGY

10,000 HOURS CELL LIFE

DIGITAL SCREEN

INTELLIGENT SENSING SYSTEM

INTELLIGENT SENSOR

IP 65 CERTIFIED



SEA 112 & 124 & 136

AQUAVISE

Applications

- Easy and flexible operation with touch-screen
- Manual operation and custom production rate setting for Mid-Day
- Production indicator, salt amount indicator and cell operation time indicator
- Filter exit and external exit with Timed function
- Filter tracking, water flow detection, pool cover detection, gas sensor entries
- Water temperature sensor entry
- High efficiency and low energy consumption with bipolar cell technology
- Display and audible warning for Warning / Alarm / Error situations
- Tracking and control on mobile application (Optional)
- Cloud server connection with IOT technology (Optional)

KOD CODE	MODEL MODEL	KAPASİTE CAPACITY	A	V	GÜÇ Kw POWER Kw	Debi FLOW	KG KG	EBAT SIZE
-	AQUAWISE Sea 112 Salt Generator	12gr/Hr	2,4A	25	60w	1,2A	4,85	44 × 18 × 36
-	AQUAWISE Sea 124 Salt Generator	24gr/Hr	4,8A	25	120w	1,7A	5,05	44 × 18 × 36
-	AQUAWISE Sea 136 Salt Generator	36gr/Hr	7,2A	25	180w	2,2A	5,4	44 × 18 × 36

Spare Parts – Options – Accessories

KOD CODE	MODEL MODEL	PAKET PACKAGE
-	112 GR/H Salt Generator Cell Set	✓
-	124 GR/H Salt Generator Cell Set	✓
-	36 GR/H Salt Generator Cell Set	✓
-	112 GR/H Salt Generator Cell	-
-	124 GR/H Salt Generator Cell	-
-	136 GR/H Salt Generator Cell	-
-	Flow Switch Inline	-
-	Flow Switch Inline Connection Equipment	-
-	Salt Generator Cell Cable Set 1,6mt	✓
-	Communication Module	-



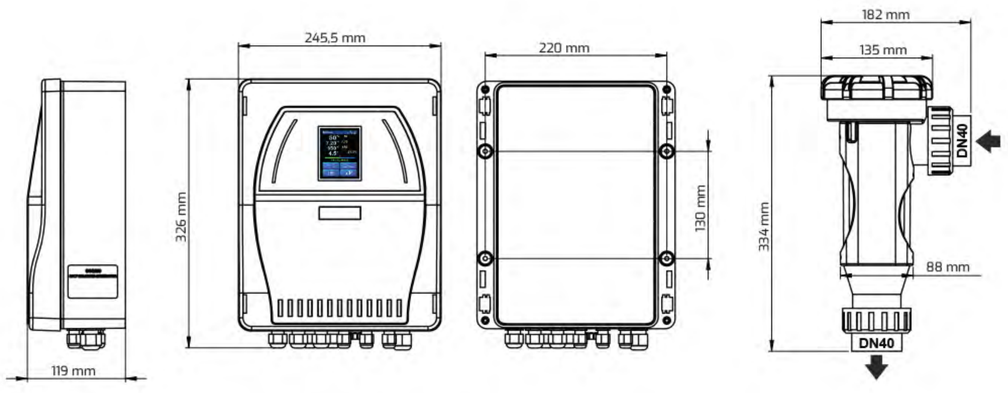

SALT CHLORINE GENERATOR



SEA 112 & 124 & 136

AQUAVISE with SALT GENERATOR

Applications

- Easy and flexible operation with touch-screen
- Manual operation and custom production rate setting for Mid-Day
- Production indicator, salt amount indicator and cell operation time indicator
- Filter exit and external exit with Timed function
- Filter tracking, water flow detection, pool cover detection, gas sensor entries
- Water temperature sensor entry
- High efficiency and low energy consumption with bipolar cell technology
- Display and audible warning for Warning / Alarm / Error situations
- Tracking and control on mobile application (Optional)
- Cloud server connection with IOT technology (Optional)

KOD CODE	MODEL MODEL	KAPASİTE CAPACITY	A	V	GÜÇ Kw POWER Kw	Debi FLOW	KG KG	EBAT SIZE
-	AQUAWISE PLUS PH Sea 112+ Salt Generator	12gr/Hr	2,4A	25	60w	1,2A	-	-
-	AQUAWISE PLUS PH Sea 124+ Salt Generator	24gr/Hr	4,8A	25	120w	1,7A	-	-
-	AQUAWISE PLUS PH Sea 136+ Salt Generator	36gr/Hr	7,2A	25	180w	2,2A	-	-
-	AQUAWISE PLUS PH MODUL	Ph Modul + Aspendos A + 1 m Ph Probe + Fixing Union + Calibration Fluid						

Spare Parts – Options – Accessories

KOD CODE	MODEL MODEL	PAKET PACKAGE
-	112 GR/H Salt Generator Cell Set	✓
-	124 GR/H Salt Generator Cell Set	✓
-	36 GR/H Salt Generator Cell Set	✓
-	112 GR/H Salt Generator Cell	-
-	124 GR/H Salt Generator Cell	-
-	136 GR/H Salt Generator Cell	-
-	Flow Switch Inline	-
-	Flow Switch Inline Connection Equipment	-
-	Salt Generator Cell Cable Set 1,6mt	✓
-	Communication Module	-

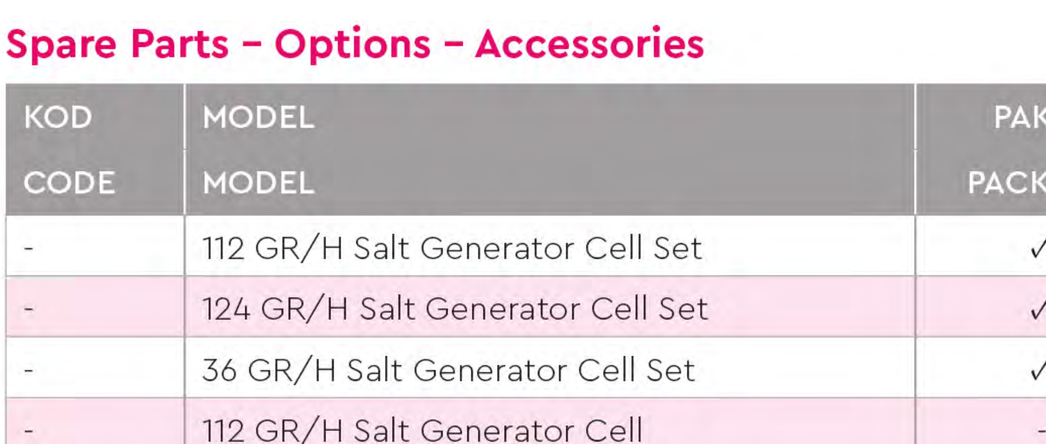







ASPENDOSE
FOR SWIMMING POOL

Technical data:

- OEM head options
- Adjustable flow rate, rapid button
- PP, chemical resistant IP 65 body
- On-Off switch
- Long-life pulley system, Chemical discharge end
- *Model options for detergent(D), rinse aid (R) and pH-Chlorine (A) dosing
- Easy assembly and disassembly thanks to the rear cover slide

KOD CODE	MODEL MODEL	L/h L/h	MAX BASINÇ PRESSURE	KG KG	EBAT SIZE
-	ASPENDOS A 5,1L / 0,5B A 220 AT	5,1	0,5	0,78	20 × 15 × 13
-	ASPENDOS A 2,8L / 3B A 220 AT	2,8	3	0,78	20 × 15 × 13

Spare Parts – Options – Accessories

KOD CODE	MODEL MODEL	PAKET PACKAGE
-	Suction Set 4X6 Aspendose Ceramic	✓
-	Injection Set 4X6 V	✓
-	Injection Set Aspendose 4X6 PVDF	✓
-	Injection Set Metal 4X6 V Aspendose	✓
-	Nozzle Kit Aspendose	✓
-	Hose Set 4×6 Aspendose	✓
-	Mounting Set Aspendose	✓
-	PVDF Nozzle Tee PVDF Connection TEE	-

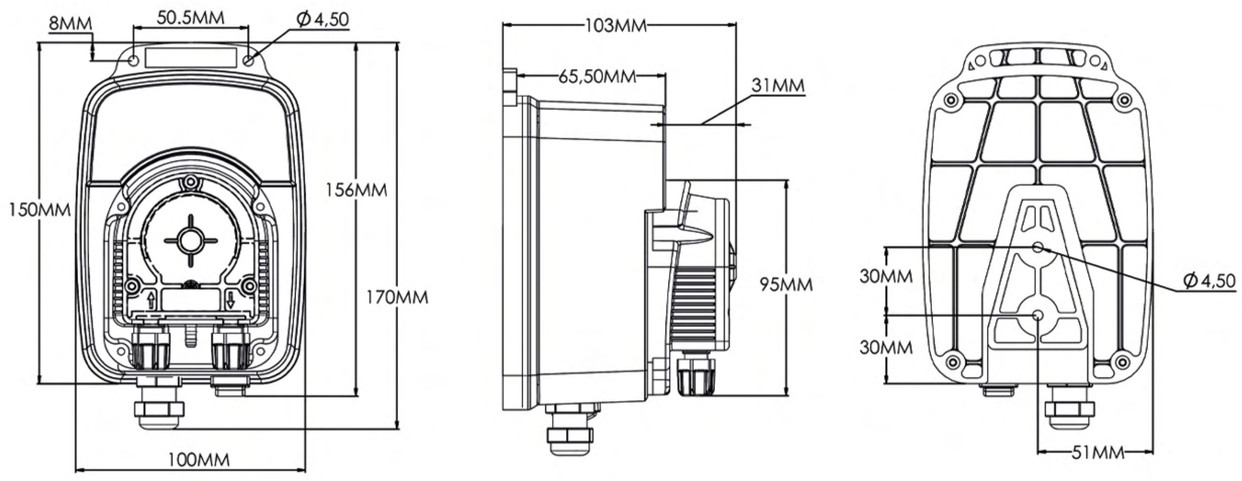





ASPENDOSE PR
FOR SWIMMING POOL

Technical data:

- Digital display, Precise dosing with microcontroller technology, time adjustment and user password parameters
- Easy menu content and user-friendly button technology
- ORP (REDOX) or pH measurement with standard combined electrodes
- Fully digital tuning and automatic calibration using buffer liquid
- To be able to enter measurement value definition time at opening (0 – 60 min.)
- Volumetric proportional dosing when connected to the water meter or flow meters
- (Volumetric connection cable not included)
- 4–20 mA analog input, liquid level control alarm relay
- Programmable fluid level or flow control
- Easy and flexible installation, operation thanks to vertical slide wall mounting or optional mounting foot
- All-plastic body for high resistance to corrosive chemicals
- Monitoring the pump capacity on the screen in mLt/H and performing flow calibration
- Easy maintenance and different capacity options thanks to OEM head options
- With Injection and suction fluid level sensor accessories

KOD CODE	MODEL MODEL	L/h L/h	MAX BASINÇ PRESSURE	KG KG	EBAT SIZE
-	ASPENDOS PR 4,3L / 0,5B A 220 AT	4,3	0,5	1,615	12 × 24 × 13
-	ASPENDOS PR 2,5L / 3B A 220 AT	2,5	3	1,615	12 × 21 × 13

Spare Parts – Options – Accessories

KOD CODE	MODEL MODEL	PAKET PACKAGE
-	Suction Set 4X6 VS	✓
-	Injection Set 4X6 V	✓
-	Hose Set V	✓
-	Mounting Set for DP	✓
-	Cable Set Signal External, DP Lara, Cable Set	-
-	Foot Mount Bracket DP	-

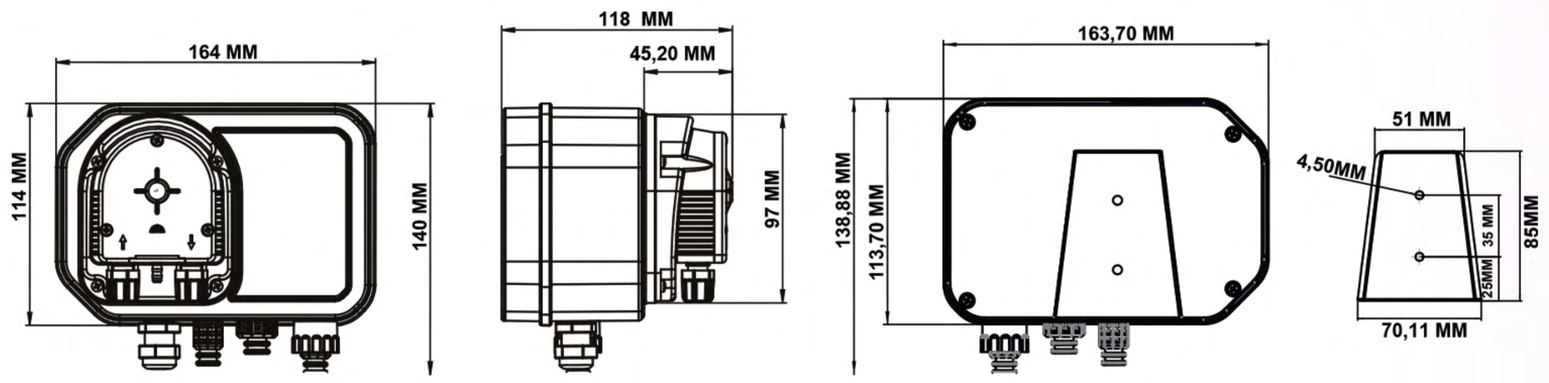



SYSTEM OMNICON

Pool Control System

Technical data:

- All connection components mounted on 60×90 panel
- OmniCon pH FClp Temp
- Dirt trap pre-filter
- Electrode flow cell
- Inlet-outlet records (6×8 mm) and sampling valve
- Calibration liquids and calibration stand
- pH electrode and 0–10 ppm potentiostatic free chlorine electrode
- Temperature sensor

KOD CODE	MODEL MODEL	AÇIKLAMA DESCRIPTION	KG KG	EBAT SIZE
-	SYSTEM OMNICON PH FCLp TEMP	Ph & Free Chlorine Potentiostatic & Temperature Measurement And Controlling System	8,35	96 × 66 × 16

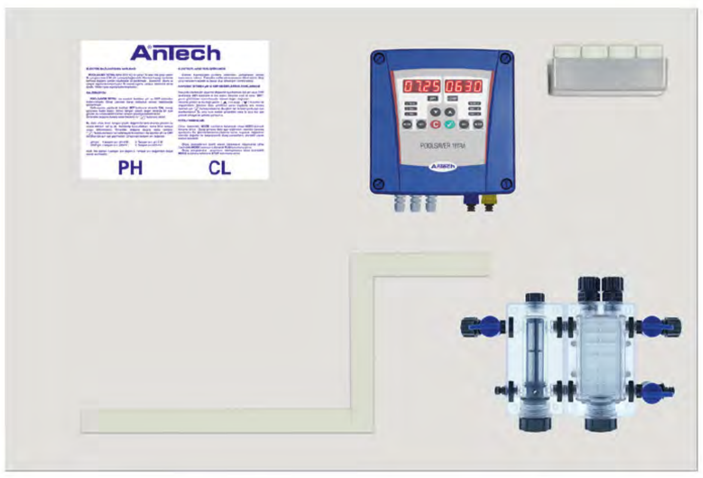

SYSTEM 02

Pool Control System

Technical data:

- All connection components mounted on 60×90 panel
- Poolsaver Tetra with measuring and control device
- 2 level sensor inputs, 1 flow switch input
- Dirt trap pre-filter
- Electrode flow cell
- Inlet-outlet records (6×8 mm) and sampling valve
- Calibration liquids and calibration stand
- pH and ORP electrode (pH and ORP electrodes in SYSTEM 02 E are E model.)

KOD CODE	MODEL MODEL	AÇIKLAMA DESCRIPTION	KG KG	EBAT SIZE
-	SYSTEM 02	Ph & Orp Measurement System	6,85	96 × 66 × 16

CONTROL SYSTEMS





NANO A

SYSTEM 03

Pool Control System

Technical data:

- All connection components mounted on 45×60 panel
- Poolsaver Tetra
- 2 level sensor inputs, 1 flow switch input
- 2pcs 5L/5B Nano A Dosing Pump
- Double input electrode housing cell
- Calibration liquids and calibration stand
- pH and ORP electrode
- (pH and ORP electrodes are model E at SYSTEM 03 E.)

KOD CODE	MODEL MODEL	AÇIKLAMA DESCRIPTION	KG KG	EBAT SIZE
-	SYSTEM 03	Ph & Orp Measurement System with 5L/5B Dosing Pump	8,40	65 × 51 × 16



SYSTEM AQUATIC

Pool Control System

Technical data:

- All connection components mounted on 45×60 panel
- AQUATIC 5.1L/0.5B or AQUATIC 2,8L/3B option
- 2 level sensor inputs, 1 flow switch input
- Double input electrode housing cell
- Calibration liquids and calibration stand
- pH and ORP electrode
- (The pH and ORP electrodes in the SYSTEM Aquatic E are model E.)

KOD CODE	MODEL MODEL	AÇIKLAMA DESCRIPTION	KG KG	EBAT SIZE
-	SYSTEM AQUATIC	Ph & Orp Measurement System with 5.1L/0 .5B Dosing Pump	6,70	65 × 51 × 16





LARA A

SYSTEM 04

Pool Control System

Technical data:

- All connection components mounted on 50×75 panel
- Poolsaver Tetra
- 2 level sensor inputs, 1 flow switch input
- 2pcs 5L/7B Lara A Dosing Pump
- Double input electrode housing cell
- Calibration liquids and calibration stand
- pH and ORP electrode
- (In SYSTEM 04 E, pH and ORP electrodes are model E.)

KOD CODE	MODEL MODEL	AÇIKLAMA DESCRIPTION	KG KG	EBAT SIZE
-	SYSTEM 04	Ph & Orp Measurement System with 5L/7B Dosing Pump	11,40	78 × 54 × 19





OPTIMA

SYSTEM 05

Pool Control System

Technical data:

- All connection components mounted on 50×75 panel
- Poolsaver Tetra
- 2 level sensor inputs, 1 flow switch input
- 2pcs 5L/10B Optima A Dosing Pump
- Double input electrode housing cell
- Calibration liquids and calibration stand
- pH and ORP electrode
- (pH and ORP electrodes are model E at SYSTEM 05 E.)

KOD CODE	MODEL MODEL	AÇIKLAMA DESCRIPTION	KG KG	EBAT SIZE
-	SYSTEM 05	Ph & Orp Measurement System with 5L/10B Dosing Pump	11,40	78 × 54 × 19

CONTROL SYSTEMS

NEW IN 2023

WATER ANALYZER ELECTRONIC ICO

A GUARDIAN ANGEL FOR YOUR POOL

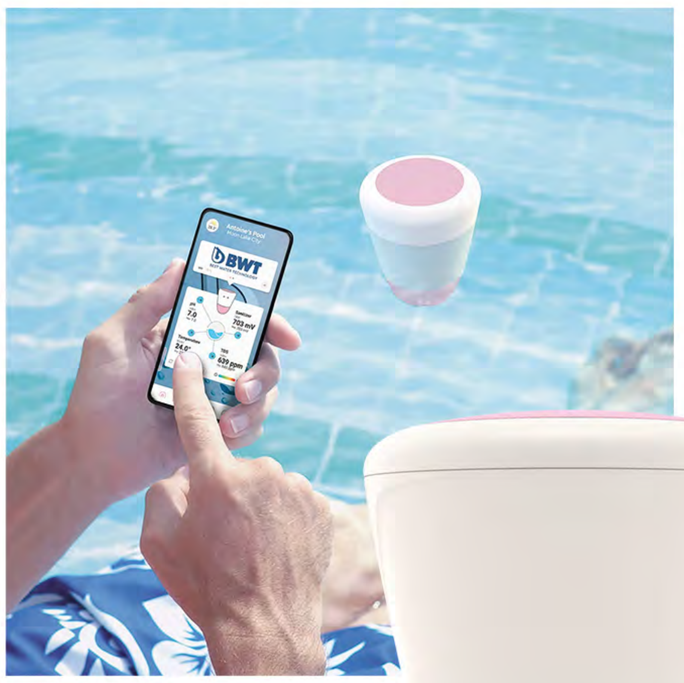



Comfort

Health

Control

Economy

at any time of the day
to your pool water
keep an eye on

High Capacity
Powerful Battery

Plug and Play

iOS & Android
Application

Connection

Wifi + Bluetooth

READY FOR ACTION

Rechargeable

Plug and Play

Just drop me in your pool

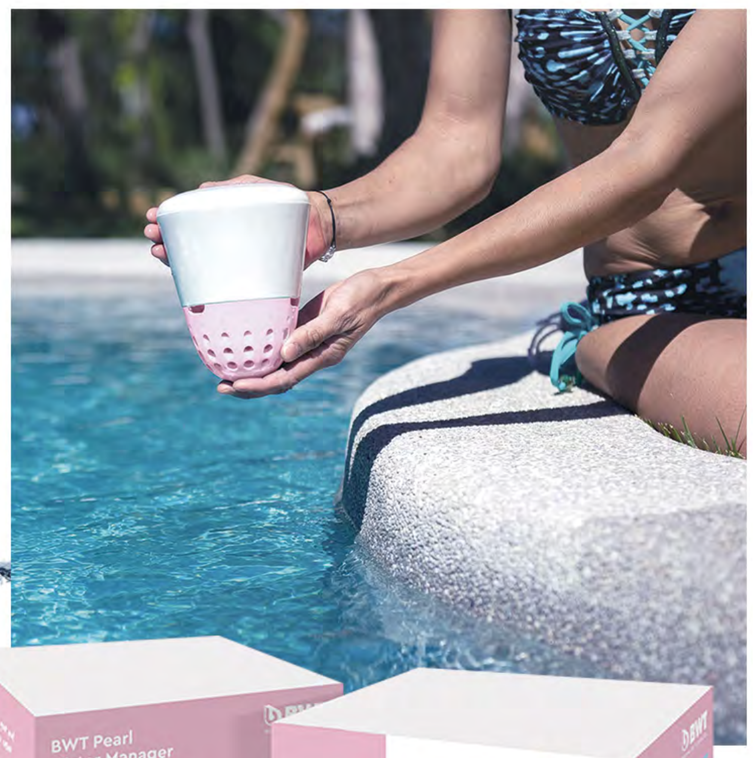







PEARL WATER MANAGER

BWT
BEST WATER TECHNOLOGY

TEST KIT TEST KİTİ

PH/CL CONTROL KIT PH/KLOR KONTROL KİTİ

KOD CODE	MODEL MODEL	KAPASİTE CAPACITY
-	Blue Garden Test Kit pH / cL	2 Way Liquid
-	Blue Garden Test Kit pH / cL	5 Way Liquid

- pH and Chlorine titrimetric measurement kits
- Measuring Range: Chlorine 0.1 – 3.0 ppm, pH 6.8 – 8.2



LIQUID SIVI

PH/CL CONTROL LIQUID PH/KLOR SIVI KONTROL

KOD CODE	MODEL MODEL	KAPASİTE CAPACITY
-	Blue Garden Liquid Line Set	2 Line Set
-	Blue Garden Liquid Line Set	5 Line Set



TEST KIT TABLET TEST KİTİ TABLETİ

PH/CL CONTROL TABLET PH/KLOR KONTROL TABLETİ

KOD CODE	MODEL MODEL	KAPASİTE CAPACITY
-	Blue Garden Tablet – pH / cL	-

- Measuring kit with pH and Chlorine tablet
- Measuring Range: Chlorine 0.1 – 3.0 ppm, pH 6.8 – 8.2
- 20 Pcs pH Tablets – 20 Pcs Free Chlorine Tablets



DISPENSER DİSPENSER

PH/CL MODULE PH/KLOR MODÜL

KOD CODE	MODEL MODEL	KAPASİTE CAPACITY
-	Blue Garden Dispenser	1 Kg
-	Blue Garden Dispenser Mini	200 gr



TEST KITS
DISINFECTION

13 HEATERS



FLOWLINE 2

- PERFECT DESIGN
- GOOD PERFORMANCE
- ECONOMY



EVOLUTION 2

- PERFECT DESIGN
- GOOD PERFORMANCE
- ECONOMY



EXCHANGER

- PERFECT DESIGN
- GOOD PERFORMANCE
- ECONOMY



SUITABLE FOR:

Above-Ground Pools

Spas

Residential Pools



FLOWLINE 2

SWIMMING POOL HEATER

Applications

Reliable, accurate and efficient, the Elecro FlowLine 2 fully titanium heater is the ideal choice for in-ground pools, above-ground pools and spas.

Features & Benefitss

Nine power options ranging from 2-kW to 24-kW
Non-wired, requires connection to external contactor
Robust, durable construction
Ultra-reliable flow switch allows safe operation
Fitted with temperature thermostat and overheating sensor
Compact, durable design
Analogue control with 1.2°C differential
Titanium flow tube and titanium heating element(s)
Can be floor or vertically wall mounted
Vortex, long life, stay clean heating element technology
100% efficiency throughout product life
Silent operation

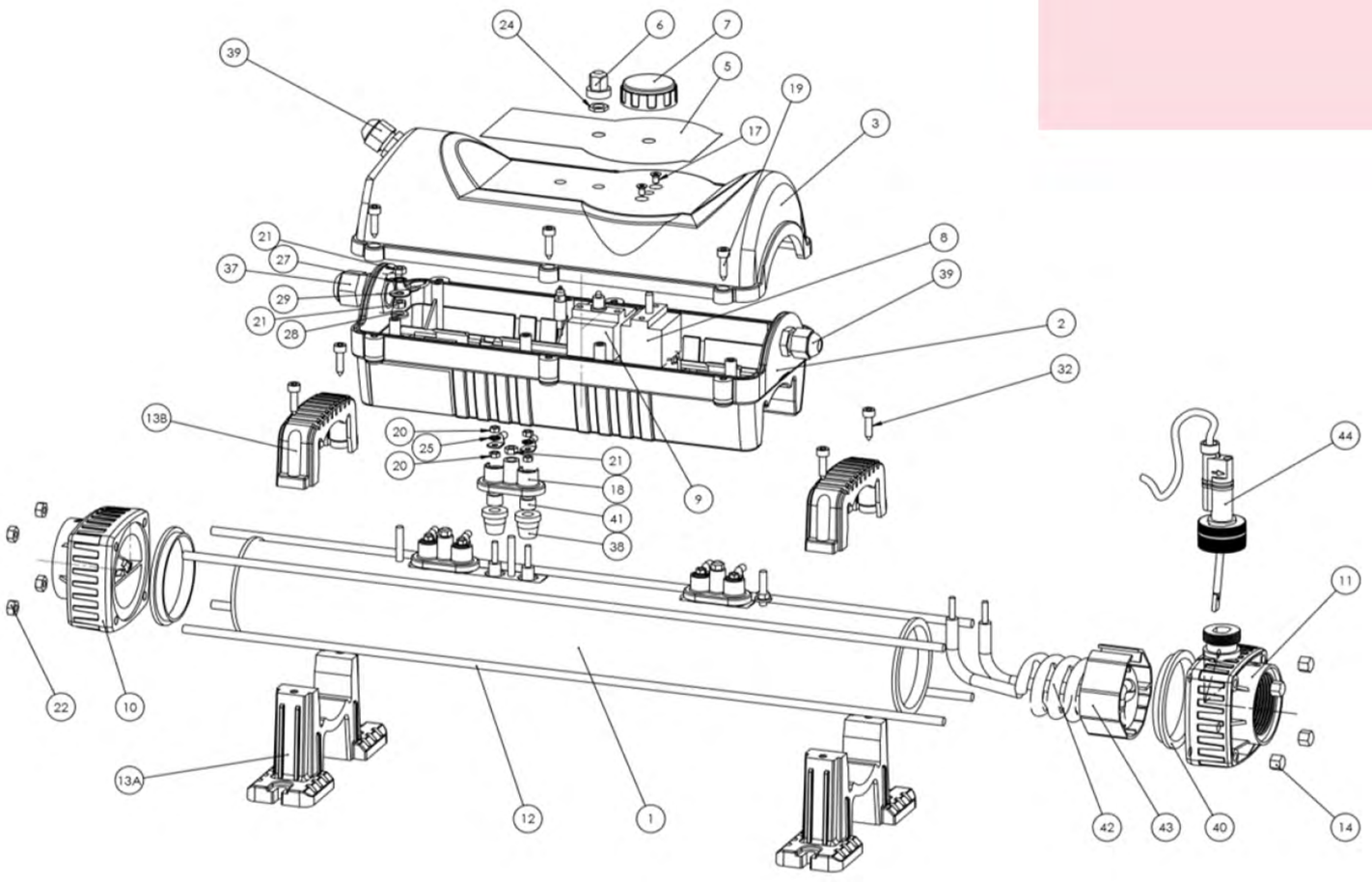

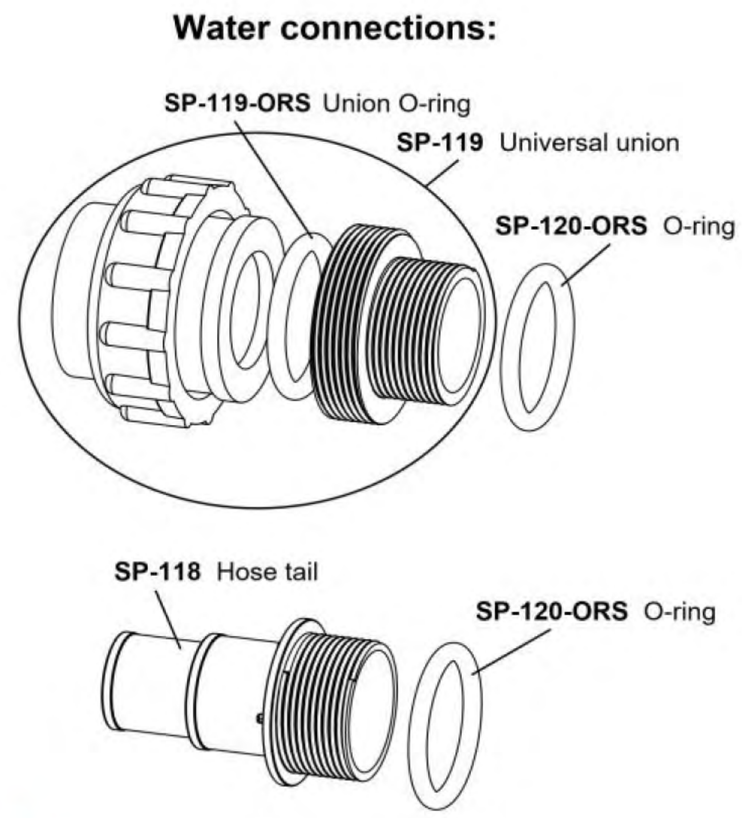

Heater in Swimming Pool









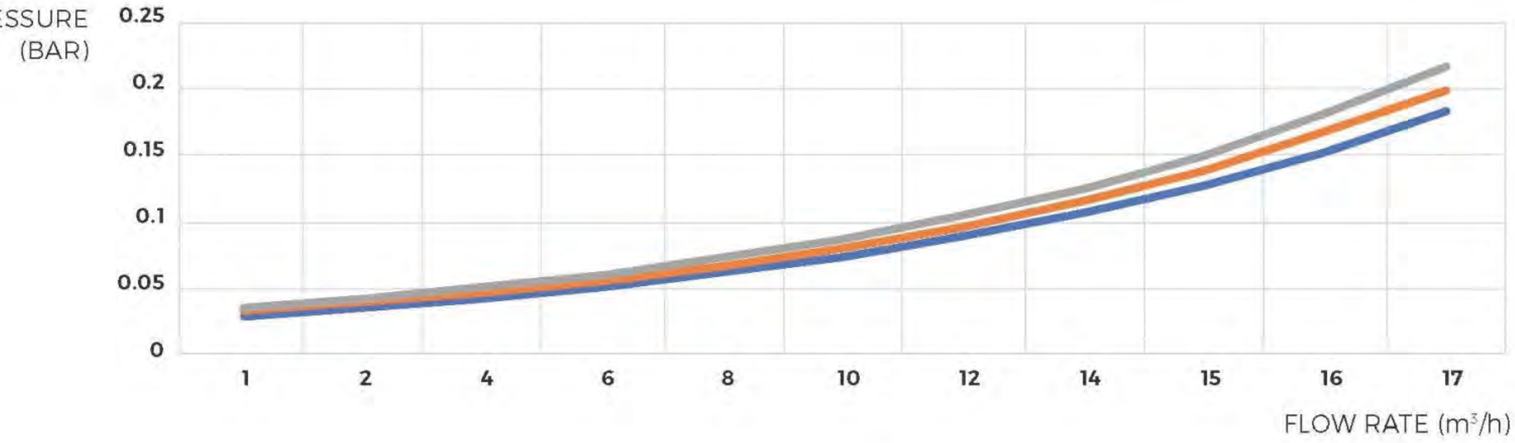

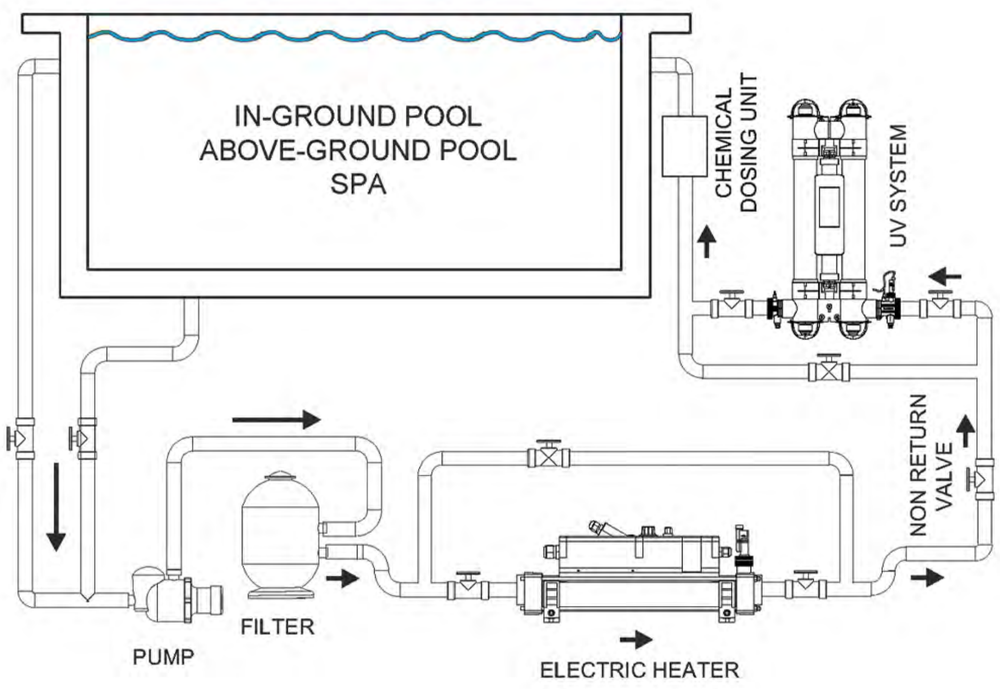

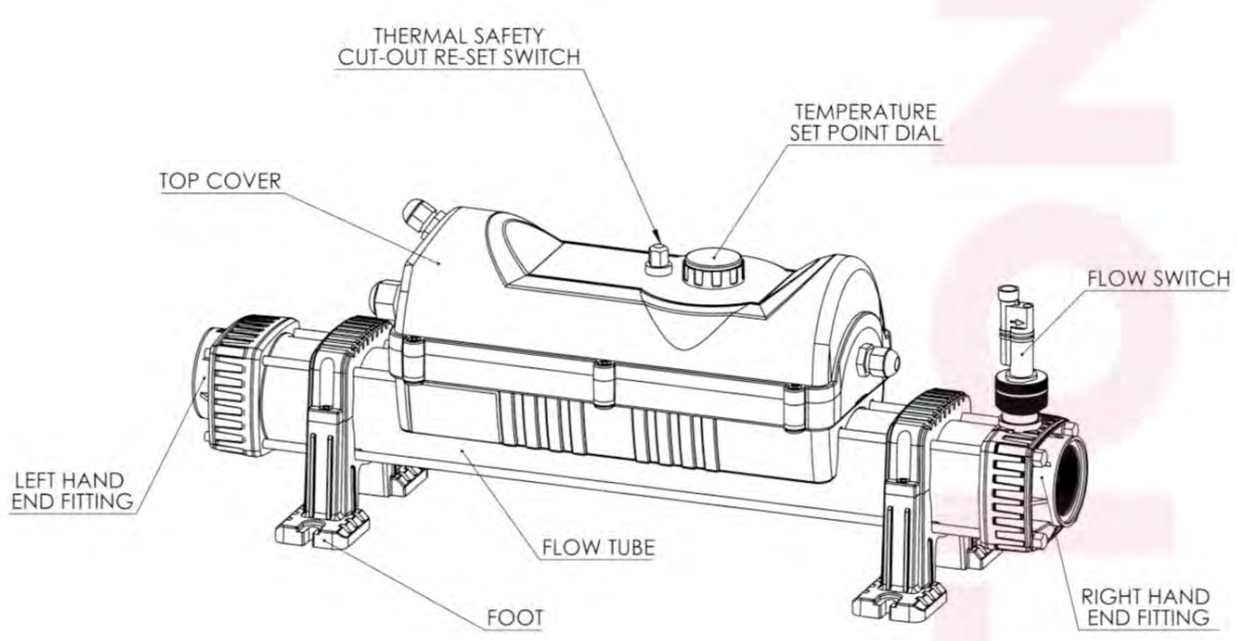

KOD CODE	MODEL MODEL	GÜÇ POWER	FAZ PHASE	DEBİ FLOW
-	Flowline 2	6kW	Mono Mono	17 m3/h
-	Flowline 2	6kW	Trifaz Threephase	17 m3/h
-	Flowline 2	9kW	Trifaz Threephase	17 m3/h
-	Flowline 2	12kW	Trifaz Threephase	17 m3/h
-	Flowline 2	15kW	Trifaz Threephase	17 m3/h
-	Flowline 2	18kW	Trifaz Threephase	17 m3/h
-	Flowline 2	24kW	Trifaz Threephase	17 m3/h

Water Connection
1.5" BSP female thread supplied with 1½" / 50mm stepped ABS unions for rigid pipe and 1½" / 1¼" stepped hose tails for flexible pipe

Ingress Protection Rating
IP44

Frequency
50/60 Hz

Working Pressure
4 bar maximum

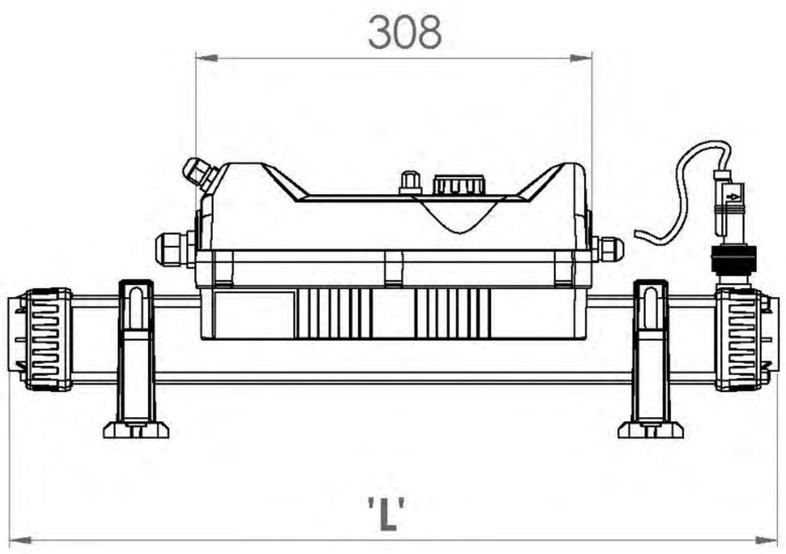

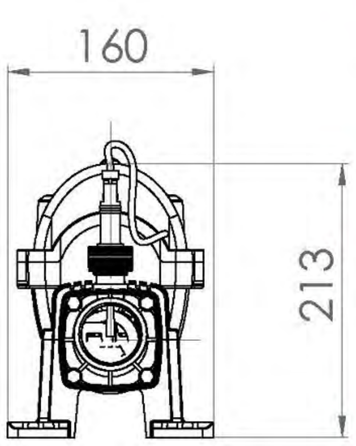

Mounting
Floor or wall mounting

Control Thermostat
Analogue: 0>45°C (1.2°C differential)

Flow Switch
Gold tipped reed switch with titanium fulcrum pin

Seals
High temperature special formula EPDM ferrules, TPE end fitting gaskets

SUITABLE FOR:

Above-Ground Pools

Spas

Residential Pools



EVOLUTION 2

SWIMMING POOL HEATER

Applications

A fully titanium heater by Elecro, the Evolution 2, is the latest and upgraded version of the original Evolution. Boasting 100% efficiency, safety, and above all, reliability, this compact and robust unit will effortlessly heat your pool or spa to your desired temperature.

Features & Benefitss

Ten power options ranging from 1-kW to 24-kW
Easy installation, fully equipped and pre-wired
Robust, durable construction
Ultra-reliable flow switch allows safe operation
Temperature thermostat and overheating sensor
Compact, durable design
Analogue control with 1.2˚C differential or digital control with 0.5˚C differential and selectable multi-lingual display
Titanium flow tube and titanium heating element
Can be floor or vertically wall mounted
Vortex, long life, stay clean heating element technology
100% efficiency throughout the product life
Silent operation

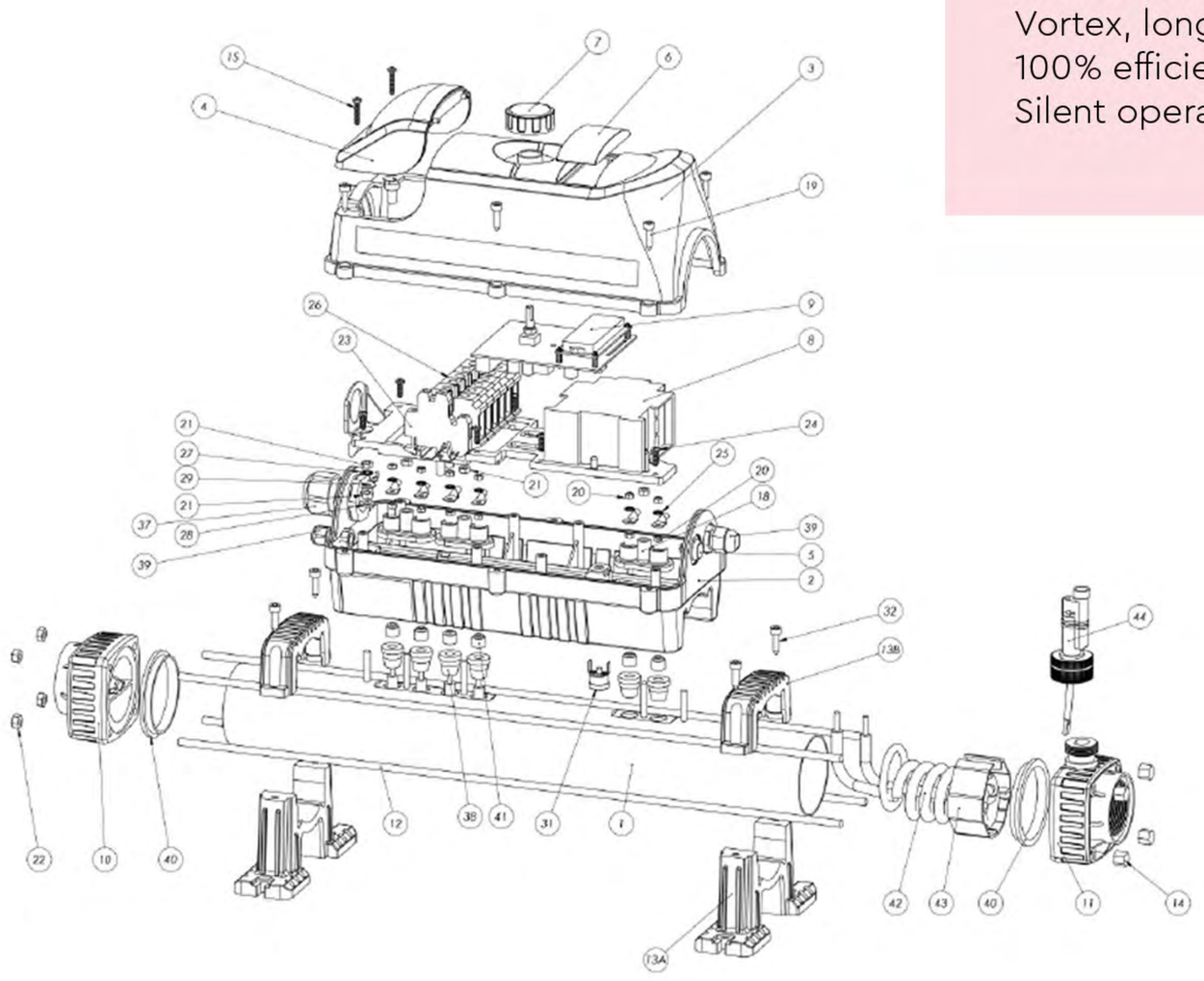

Water connections:

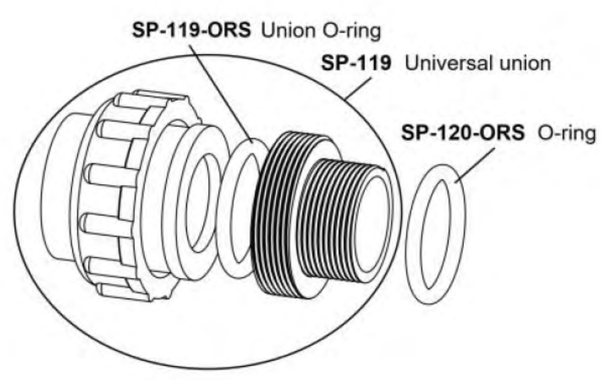

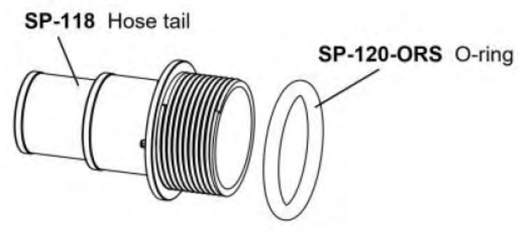

Heater in Swimming Pool









Power Supply
Single phase or three phase

Flow Requirements
Minimum flow: 1-kW to 6-kW, 1m³/h
Minimum flow: 9-kW to 24-kW, 4m³/h
Maximum flow: 17m³/h

Heating Elements
Grade 1 titanium

Flow Tube
Grade 1 titanium

Control Thermostat
Analogoue: 0>45°C (1.2°C differential)
Digital: 0 > 45°C (0.5°C differential)

Safety Thermal Cut Out
60°C (manual reset)

Flow Switch
Gold tipped reed switch with titanium fulcrum pin

Contactor
Siemens 3RT2023 OR 3RT2027

Seals
High temperature special formula EPDM ferrules, TPE end fitting gaskets

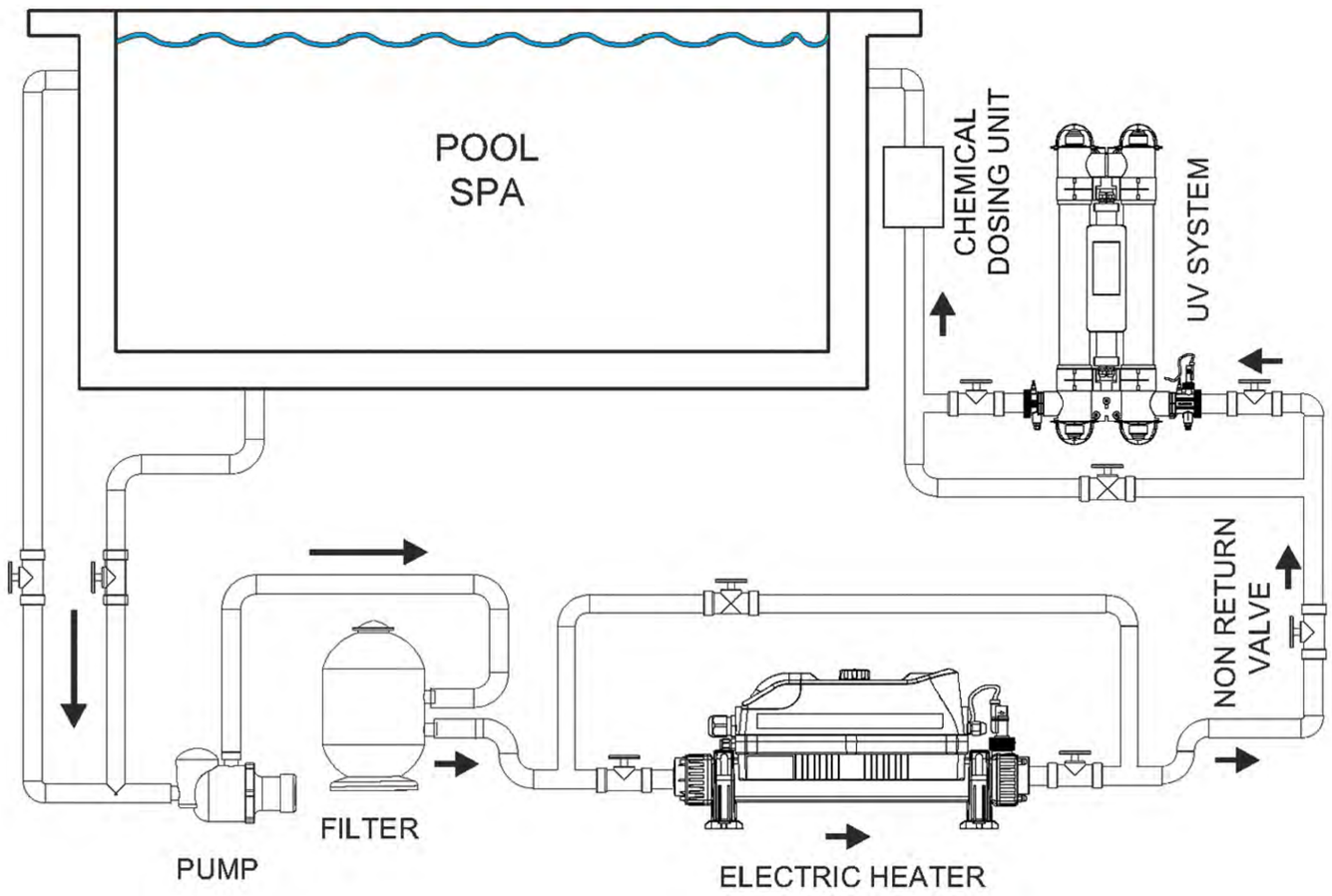

KOD CODE	MODEL MODEL	GÜÇ POWER	FAZ PHASE	DEBİ FLOW
-	Evolution 2	6kW	Mono Tri	17 m3/h
-	Evolution 2	9kW	Trifaz Threephase	17 m3/h
-	Evolution 2	12kW	Trifaz Threephase	17 m3/h
-	Evolution 2	15kW	Trifaz Threephase	17 m3/h
-	Evolution 2	18kW	Trifaz Threephase	17 m3/h
-	Evolution 2	24kW	Trifaz Threephase	17 m3/h

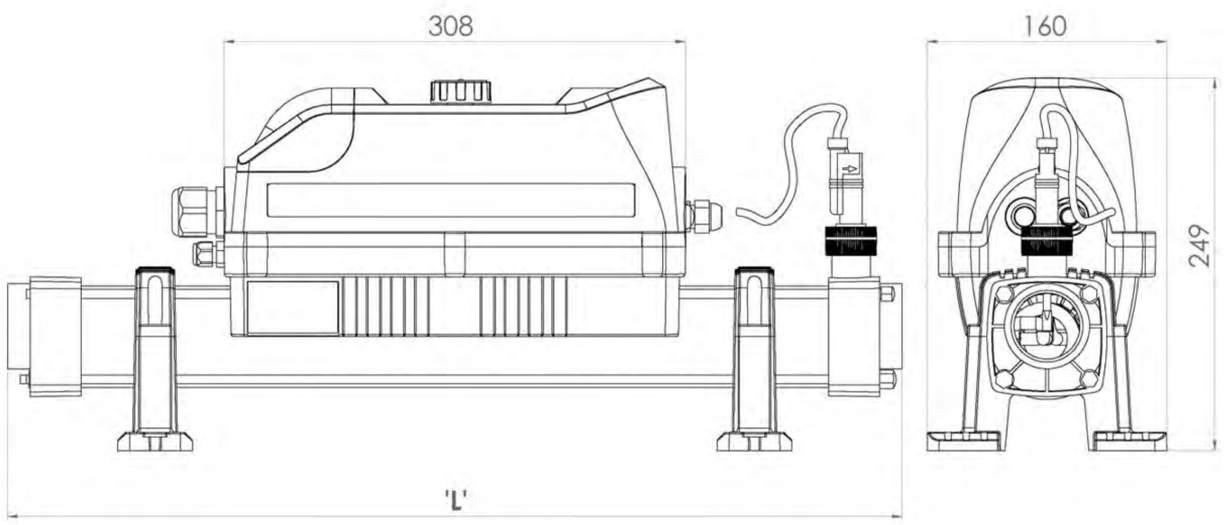

Water Connection
1.5" BSP female thread supplied with 1½" / 50mm stepped ABS unions for rigid pipe and 1½" / 1¼" stepped hose tails for flexible pipe

Ingress Protection Rating
IP44

Frequency
50/60 Hz

Working Pressure
4 bar maximum

Mounting
Floor or wall mounting



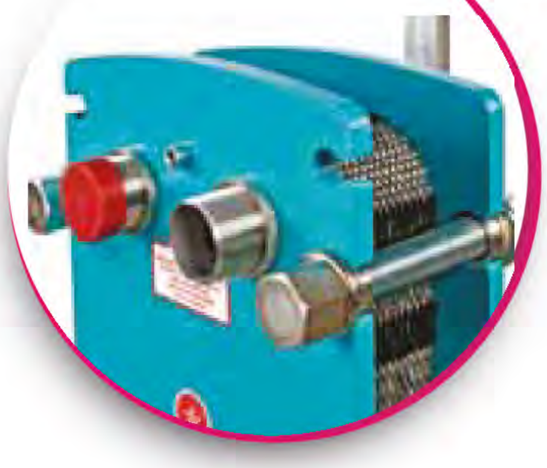

EXCHANGER
FOR SWIMMING POOL

Description:

- ▶ Front frame with In-Out Connections and information on it,
- ▶ Top and bottom carrying shafts which are used for fixing plates,
- ▶ First plate that prevents liquid from contacting with frame,
- ▶ Flow plates which let liquids to pass and enable heat transfer,
- ▶ Fully closed last plate which prevents liquids from touching back frame,
- ▶ Back frame with assembly and maintenance instructions on it, which can move on the shafts,
- ▶ Washers and pins which enable to hold plates in a certain squeezing level.

Plate heat exchangers are such devices that work with the principle of two different liquids making heat transfer in themselves.

The liquid to be heated or the liquid heats, are totally seperated from each other with plates. In standart plate heat exchangers, there are 4 in-out ports and two of them are for heater liquid and two of them for heated liquid. With special production, it is possible to produce heat exchangers which have more than one heater or heated liquids.

- ▶ Model information of our heat exchanger,
- ▶ Plate number of our heat exchanger,
- ▶ Production number of our heat exchanger,
- ▶ Capacity information of our heat exchanger,
- ▶ Test and using temperature of our heat exchanger,
- ▶ Test and using pressure of our heat exchanger,
- ▶ Minumum squeezing dimensions of our heat exchanger,

Details:

1) FRONT BODY
2) PLATE AND GASKETS
3) PLATE HARNESS
4) END PLATE
5) REAR BODY
6) HANGER BAR
7) BASE SUPPORT BAR
8) REAR SUPPORT PROFILE
9) TIGHTENING SCREWS
10) FLANGE STUD

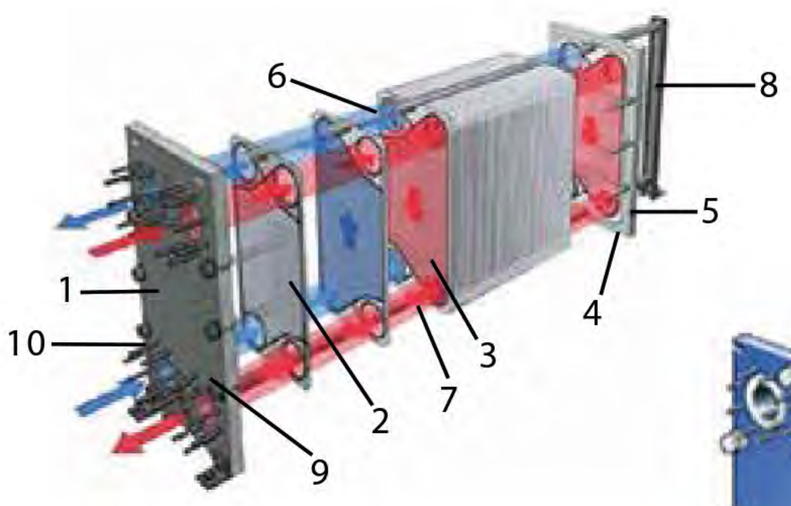

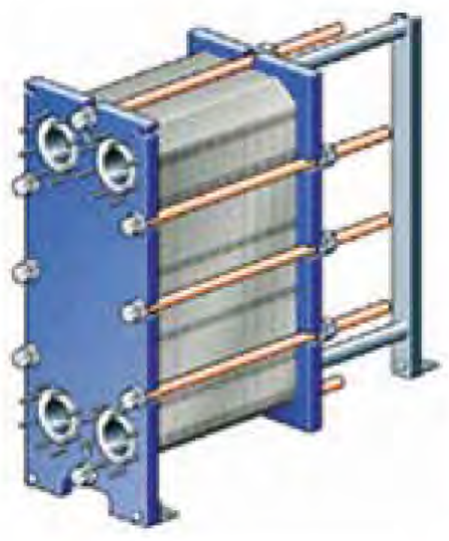

EXCHANGER

CODE	MODEL	SYSTEM	CAPACITY	HEAT	TYPE	CONNECT	PLATE	PRICE
2520101	10	12	17.000	10-28	504	11/4"	5	€
2520102	15	12	25.000	10-28	504	11/4"	5	€
2520103	20	12	34.000	10-28	504	11/4"	5	€
2520104	25	12	42.000	10-28	504	11/4"	6	€
2520105	30	12	45.000	10-28	504	11/4"	7	€
2520106	35	12	52.500	10-28	504	11/4"	8	€
2520107	40	12	60.000	10-28	504	11/4"	9	€
2520108	45	12	67.500	10-28	504	11/4"	10	€
2520109	50	12	75.000	10-28	504	11/4"	10	€
2520110	60	12	90.000	10-28	504	11/4"	12	€
2520111	70	12	105.000	10-28	504	11/4"	14	€
2520112	80	12	120.000	10-28	504	11/4"	16	€
2520113	90	12	135.000	10-28	504	11/4"	18	€
2520114	100	12	150.000	10-28	504	11/4"	20	€
2520115	125	12	188.000	10-28	504	11/4"	26	€
2520116	150	12	225.000	10-28	504	11/4"	34	€
2520117	175	12	262.000	10-28	504	11/4"	44	€
2520118	200	12	300.000	10-28	514	2"	10	€
2520119	250	12	375.000	10-28	514	2"	12	€
2520120	300	12	450.000	10-28	514	2"	16	€
2520121	400	12	600.000	10-28	514	2"	20	€
2520122	500	12	750.000	10-28	514	2"	28	€
2520123	30	18	30.000	10-28	504	11/4"	5	€
2520124	35	18	35.000	10-28	504	11/4"	6	€
2520125	40	18	40.000	10-28	504	11/4"	6	€
2520126	45	18	45.000	10-28	504	11/4"	7	€
2520127	50	18	50.000	10-28	504	11/4"	8	€
2520128	60	18	60.000	10-28	504	11/4"	9	€
2520129	70	18	70.000	10-28	504	11/4"	10	€
2520130	80	18	80.000	10-28	504	11/4"	11	€
2520131	90	18	90.000	10-28	504	11/4"	12	€
2520132	100	18	100.000	10-28	504	11/4"	14	€
2520133	125	18	125.000	10-28	504	11/4"	18	€
2520134	150	18	150.000	10-28	504	11/4"	20	€
2520135	175	18	175.000	10-28	504	11/4"	24	€
2520136	200	18	200.000	10-28	504	11/4"	28	€
2520137	250	18	250.000	10-28	504	11/4"	38	€
2520138	300	18	300.000	10-28	514	2"	10	€
2520139	400	18	400.000	10-28	514	2"	13	€
2520140	500	18	500.000	10-28	514	2"	17	€
2520145	50	24	38.000	10-28	504	11/4"	7	€
2520146	60	24	45.000	10-28	504	11/4"	7	€
2520147	70	24	53.000	10-28	504	11/4"	8	€
2520148	80	24	60.000	10-28	504	11/4"	9	€
2520149	90	24	67.000	10-28	504	11/4"	10	€
2520150	100	24	75.000	10-28	504	11/4"	10	€
2520151	125	24	94.000	10-28	504	11/4"	12	€
2520152	150	24	112.000	10-28	504	11/4"	16	€
2520153	175	24	132.000	10-28	504	11/4"	18	€
2520154	200	24	150.000	10-28	504	11/4"	20	€
2520155	250	24	190.000	10-28	504	11/4"	26	€
2520156	300	24	225.000	10-28	504	11/4"	34	€
2520157	400	24	300.000	10-28	514	2"	10	€
2520158	500	24	375.000	10-28	514	2"	12	€

BRT

POOL PRODUCTION FOCUS

EXPORT TO ALL OVER THE WORLD



www.barutgroup.com.tr

MADE IN
BRT
POOL PRODUCTION FOCUS
MADE IN

BARUT
GROUP
POOL PRODUCTION FOCUS

BRT
POOL PRODUCTION FOCUS

T.C.
TÜRK PATENT ve MARKA KURUMU

MARKA TESCİL BELGESİ

Marka No : 2020 72873 - Hizmet

SERMED HAVUZ

Marka Sahibi : SERMED HAVUZ SİSTEMLERİ EĞİTİM SAĞLIK VE İNŞAAT SAN. TİC. VE LTD. ŞTİ.
TÜRKİYE CUMHURİYETİ
Çavuşoğlu Mah. Meşeli Ayazma Cad. Çelebi Blokları D Blok No 2 Kartal İstanbul

Emtiası : 35
İlişiktedir.

İşbu Marka 01/07/2020 tarihinden itibaren ON YIL süreyle 19/02/2021 tarihinde tescil edilmiştir.

Prof. Dr. Habip ASAN
Türk Patent ve Marka Kurumu Başkanı

TÜRK PATENT

T.C.
TÜRK PATENT ve MARKA KURUMU

MARKA TESCİL BELGESİ

Marka No : 2019 05651 - Ticaret

www.prefabrikhavuz.com.tr

Marka Sahibi : SERMED HAVUZ SİSTEMLERİ EĞİTİM SAĞLIK VE İNŞAAT SAN. TİC. VE LTD. ŞTİ.
TÜRKİYE CUMHURİYETİ
Çavuşoğlu Mah. Meşeli Ayazma Cad. Çelebi Blokları D Blok No 2 Kartal İstanbul

Emtiası : 19

Akvaryum kumları.

İşbu Marka 21/01/2019 tarihinden itibaren ON YIL süreyle 22/07/2019 tarihinde tescil edilmiştir.

Prof. Dr. Habip ASAN
Türk Patent ve Marka Kurumu Başkanı

TÜRK PATENT

T.C.
TÜRK PATENT ve MARKA KURUMU

MARKA TESCİL BELGESİ

Marka No : 2020 72885 - Ticaret

BLUE GARDEN

Marka Sahibi : SERMED HAVUZ SİSTEMLERİ EĞİTİM SAĞLIK VE İNŞAAT SAN. TİC. VE LTD. ŞTİ.
TÜRKİYE CUMHURİYETİ
Çavuşoğlu Mah. Meşeli Ayazma Cad. Çelebi Blokları D Blok No 2 Kartal İstanbul

Emtiası : 19
İlişiktedir.

İşbu Marka 01/07/2020 tarihinden itibaren ON YIL süreyle 03/03/2021 tarihinde tescil edilmiştir.

Prof. Dr. Habip ASAN
Türk Patent ve Marka Kurumu Başkanı

TÜRK PATENT

TÜRK PATENT

MARKA TESCİL BELGESİ

No: 2021 122627 - Ticaret - Hizmet

Fiplus

Marka Sahibi
SERMED HAVUZ SİSTEMLERİ EĞİTİM SAĞLIK VE İNŞAAT SAN. TİC. VE LTD. ŞTİ.

Mal / Hizmet Sınıfları
35

Bu marka, 6769 sayılı Sınai Mülkiyet Kanunu kapsamında,
02.09.2021 tarihinden itibaren 10 yıl süreyle korunmak üzere,
10.03.2023 tarihinde tescil edilmiştir.

Cemil BAŞPINAR
Kurum Başkanı

T.C.
TÜRK PATENT ve MARKA KURUMU

MARKA TESCİL BELGESİ

Marka No : 2021 026458 - Ticaret - Hizmet

MALDİV

Marka Sahibi : SERMED HAVUZ SİSTEMLERİ EĞİTİM SAĞLIK VE İNŞAAT SAN. TİC. VE LTD. ŞTİ.
TÜRKİYE CUMHURİYETİ
Çavuşoğlu Mah. Meşeli Ayazma Cad. Çelebi Blokları D Blok No 2 Kartal İstanbul

Emtiası : 06 , 19 , 35
İlişiktedir.

İşbu Marka 18/02/2021 tarihinden itibaren ON YIL süreyle 01/11/2021 tarihinde tescil edilmiştir.

Prof. Dr. Habip ASAN
Türk Patent ve Marka Kurumu Başkanı

TÜRK PATENT

T.C.
TÜRK PATENT ve MARKA KURUMU

MARKA TESCİL BELGESİ

Marka No : 2021 026691 - Ticaret - Hizmet

BORA

Marka Sahibi : SERMED HAVUZ SİSTEMLERİ EĞİTİM SAĞLIK VE İNŞAAT SAN. TİC. VE LTD. ŞTİ.
TÜRKİYE CUMHURİYETİ
Çavuşoğlu Mah. Meşeli Ayazma Cad. Çelebi Blokları D Blok No 2 Kartal İstanbul

Emtiası : 06 , 19 , 35
İlişiktedir.

İşbu Marka 18/02/2021 tarihinden itibaren ON YIL süreyle 14/10/2021 tarihinde tescil edilmiştir.

Prof. Dr. Habip ASAN
Türk Patent ve Marka Kurumu Başkanı

TÜRK PATENT

TÜRK PATENT
TÜRK PATENT VE MARKA KURUMU

MARKA TESCİL BELGESİ

No: 2021 154954 - Ticaret - Hizmet

aquawise

Marka Sahibi
SERMED HAVUZ SİSTEMLERİ EĞİTİM SAĞLIK VE İNŞAAT SAN. TİC. VE LTD. ŞTİ.

Mal / Hizmet Sınıfları
06, 19, 35

Bu marka, 6769 sayılı Sınai Mülkiyet Kanunu kapsamında,
02.11.2021 tarihinden itibaren 10 yıl süreyle korunmak üzere,
18.04.2022 tarihinde tescil edilmiştir.

Cemil BAŞPINAR
Kurum Başkan V.

EINCERT

CERTIFICATE

This certificate /*Bu sertifika*

BARUT PREFABRİK HAVUZ SİSTEMLERİ İTH. İHR. SAN. TİC. LTD. ŞTİ.
ÇEVRİK MAH. 164. SOK. NO:10 CUMAYERİ/DÜZCE/TÜRKİYE

The above-mentioned company, accord to the ISO 27001 standart and the company's request for the following scope given by **EINCERT** international certification and test service / *Yukarıda adı geçen firmaya, ISO 27001 standardına göre ve firmanın isteği üzerine aşağıdaki kapsam için **EINCERT** uluslar arası sertifikasyon ve test hizmetleri tarafından verilmiştir.*

ISO 27001

QUALITY MANAGEMENT

Scope of Certification/*Belgelendirme kapsamı*

HAVUZ İMALATI VE HAVUZ APARATLARI (MERDİVEN, KUM FİLTRESİ) İMALATI SATIŞI, HAVUZ İÇİ AYDINLATMA APARATLARI, TEMİZLEME APARATLARI MALZEMELERİN SATIŞI

EIN CERT

Certificate No/*Belge No:* 106586
Date of Issue/*Veriliş Tarihi* : 07.05.2023
Expiration date/*Geçerlilik tarihi* : 07.05.2024

Certification manager / *Belgelendirme müdürü*

This document is valid as long as the company complies with the rules of certification **EINCERT**.
For more information about the period of validity of the document can be examined www.eincert.com site.
*Bu belge firmanın **EINCERT**'in belgelendirme kurallarına uyduğu sürece geçerlidir.*
Belgenin geçerlilik devamı ile ilgili bilgi için www.eincert.com sitesinde incelenebilir.

Quality Management System

EINCERT

CERTIFICATE

This certificate /*Bu sertifika*

BARUT PREFABRİK HAVUZ SİSTEMLERİ İTH. İHR. SAN. TİC. LTD. ŞTİ.
ÇEVRİK MAH. 164. SOK. NO:10 CUMAYERİ/DÜZCE/TÜRKİYE

The above-mentioned company, accord to the ISO 45001 standart and the company's request for the following scope given by **EINCERT** international certification and test service / *Yukarıda adı geçen firmaya, ISO 45001 standardına göre ve firmanın isteği üzerine aşağıdaki kapsam için **EINCERT** uluslar arası sertifikasyon ve test hizmetleri tarafından verilmiştir.*

ISO 45001

QUALITY MANAGEMENT

Scope of Certification/*Belgelendirme kapsamı*

HAVUZ İMALATI VE HAVUZ APARATLARI (MERDİVEN, KUM FİLTRESİ) İMALATI SATIŞI, HAVUZ İÇİ AYDINLATMA APARATLARI, TEMİZLEME APARATLARI MALZEMELERİN SATIŞI

EIN CERT

Certificate No/*Belge No:* 106585
Date of Issue/*Veriliş Tarihi* : 07.05.2023
Expiration date/*Geçerlilik tarihi* : 07.05.2024

Certification manager / *Belgelendirme müdürü*

This document is valid as long as the company complies with the rules of certification **EINCERT**.
For more information about the period of validity of the document can be examined www.eincert.com site.
*Bu belge firmanın **EINCERT**'in belgelendirme kurallarına uyduğu sürece geçerlidir.*
Belgenin geçerlilik devamı ile ilgili bilgi için www.eincert.com sitesinde incelenebilir.

Quality Management System

PCA
PARTNERS CERTIFICATE ASSURANCE

Sertifika

ISO 9001 : 2015

BARUT PREFABRİK HAVUZ SİSTEMLERİ İTH. İHR. SAN. TİC. LTD. ŞTİ.
Çevrik Mah. 164. Sok. NO: 10 Cumayeri/Düzce/TÜRKİYE

Bu sertifika yukarıdaki kuruluşa ait kalite yönetim sisteminin aşağıdaki kapsam çerçevesinde PCA Sertifikasyon tarafından onaylandığını göstermekte olup, sertifikanın geçerliliği kuruluşun yıllık gözetim denetimlerinden geçmesine ve Uluslararası akreditasyon kuralları gereğince ilgili yönetim sisteminin şartlarını devam ettirmesine bağlıdır.

KAPSAM

Havuz imalatı ve havuz aparatları (merdiven, kum filtresi) imalatı satışı. havuz içi aydınlatma aparatları, temizleme aparatları malzemelerin satışı

EA KODU
17-18-29

Sertifika No : KY-28698
Tescil Tarihi : 08.05.2023
Yeniden Basım Tarihi :
Geçerlilik Tarihi : 07.05.2024
Belge Periyodu : 3 Yıl (Tescil Tarihinden itibaren)
Hariç Tutma :

IAS ACCREDITED
Management Systems Certification Body
MSCB-103

PCA Sertifikasyon Onayı

PCA Sertifikasyon Hizmetleri Limited Şirketi
Orta Mah. Ordu Sk. Işpark C Blok No:26/23 Kartal / İSTANBUL
Tel: +90 216 510 63 48-49 Pbx Faks: +90 216 517 63 49
www.pca-tr.com info@pca-tr.com

FR.86 Rev.4

PCA
PARTNERS CERTIFICATE ASSURANCE

Sertifika

ISO 14001 : 2015

BARUT PREFABRİK HAVUZ SİSTEMLERİ İTH. İHR. SAN. TİC. LTD. ŞTİ.
Çevrik Mah. 164. Sok. NO: 10 Cumayeri/Düzce/TÜRKİYE

Bu sertifika yukarıdaki kuruluşa ait çevre yönetim sisteminin aşağıdaki kapsam çerçevesinde PCA Sertifikasyon tarafından onaylandığını göstermekte olup, sertifikanın geçerliliği kuruluşun yıllık gözetim denetimlerinden geçmesine ve Uluslararası akreditasyon kuralları gereğince ilgili yönetim sisteminin şartlarını devam ettirmesine bağlıdır.

KAPSAM

Temel kimyasallar, tekstil kimyasalları, kağıt kimyasalları, vucut ve cilt bakım ürün kimyasalları'nın alımı satışı. ithalatı ve ihracatı

EA KODU
17-18-29

Sertifika No : CY-34074
Tescil Tarihi : 08.05.2023
Yeniden Basım Tarihi :
Geçerlilik Tarihi : 07.05.2024
Belge Periyodu : 3 Yıl (Tescil Tarihinden itibaren)

IAS ACCREDITED
Management Systems Certification Body
MSCB-103

PCA Sertifikasyon Onayı

PCA Sertifikasyon Hizmetleri Limited Şirketi
Orta Mah. Ordu Sk. Işpark C Blok No:26/23 Kartal / İSTANBUL
Tel: +90 216 510 63 48-49 Pbx Faks: +90 216 517 63 49
www.pca-tr.com info@pca-tr.com

FR.86 Rev.4

Proper receipt of a delivery

Whether or not the package is damaged, take the time to check the contents

The package should always be opened in front of the carrier, and the condition of the material delivered should be checked.



In the event that the carrier refuses to wait until the goods are fully unpacked, this should be clearly indicated on the delivery slip before it is signed.

Possible scenarios:

The order
is not damaged
I accept the package

The order is partially damaged (not all the items are effected)

↓

I issue detailed reservations*

↓

I accept the package

↓

I confirm reservations to the carrier by registered letter within 3 days and I send the file to my BRT Group agency.

The order is partially

↓

I issue detailed

↓

I accept the package

↓

I accept the package

*Issue detailed reservations
All anomalies observed (missing ,broken or damaged items) must be recorded as reservations, signed and stamped, upon receipt of the delivery. Be careful, reservations concerning only the packaging (package wet, packaging damaged or torn, or subject to unpacking) are not accepted by carriers, the damage to the items must be clearly and precisely described.
Examples :

If no reservations are issued, the product is understood to have been accepted as delivered by the addressee, no subsequent claims will be accepted.

BRT
POOL PRODUCTION FOCUS

BRT
POOL PRODUCTION FOCUS

BRT

POOL PRODUCTION FOCUS

www.barutgroup.com.tr

HEADQUARTERS
Ferhatpaşa Mah. 35. Sok. No/8
ATAŞEHİR | İSTANBUL | TÜRKİYE
+90 (850) 495 0 200
info@barutgroup.com.tr
www.brtgroup.com.tr

AEGEAN BRANCH
Kalabak Mah.3275 Sokak No: 2
URLA | İZMİR | TÜRKİYE
+90 (850) 495 0 200
info@barutgroup.com.tr
www.brtgroup.com.tr

GEORGIA BRANCH
142 Airport Highway
BATUM | GEORGIA
+90 (850) 495 0 200
info@barutgroup.com.tr
www.brtgroup.com.tr

FACTORY
Çevrik Mah. 164. Sok. NO:10/A
Hafız Osman Cad. Cumayeri
DÜZCE | TÜRKİYE
+90 (850) 495 0 200
info@barutgroup.com.tr
www.brtgroup.com.tr

BARUT
GROUP
POOL PRODUCTION FOCUS